COMMONWEALTH OF PENNSYLVANIA
DEPARTMENT OF ENVIRONMENTAL PROTECTION
AIR QUALITY PROGRAM

TITLE V/STATE OPERATING PERMIT

Issue Date: June 18, 2026 Effective Date: August 10, 2026
Expiration Date: August 10, 2031

In accordance with the provisions of the Air Pollution Control Act, the Act of January 8, 1960, P.L. 2119, as amended, and 25 Pa. Code Chapter 127, the Owner, [and Operator if noted] (hereinafter referred to as permittee) identified below is authorized by the Department of Environmental Protection (Department) to operate the air emission source(s) more fully described in this permit. This Facility is subject to all terms and conditions specified in this permit. Nothing in this permit relieves the permittee from its obligations to comply with all applicable Federal, State and Local laws and regulations.

The regulatory or statutory authority for each permit condition is set forth in brackets. All terms and conditions in this permit are federally enforceable applicable requirements unless otherwise designated as "State-Only" or "non-applicable" requirements.

TITLE V Permit No: 48-00076

Federal Tax Id - Plant Code: 68-0514717-1

Owner Information

Name: CALPINE BETHLEHEM LLC
Mailing Address: 2254 APPLEBUTTER RD
BETHLEHEM, PA 18015-6000

Plant Information

Plant: CALPINE BETHLEHEM LLC/BETHLEHEM
Location: 48 Northampton County 48001 Bethlehem City
SIC Code: 4911 Trans. & Utilities - Electric Services

Operator

Name: JIM KLUESENER [If different from owner]
Mailing Address: 2254 APPLEBUTTER RD
BETHLEHEM, PA 18015-6000

Responsible Official

Name: JAMES KLUESENER
Title: GENERAL PLANT MANAGER
Phone: (610) 861 - 6112 Email: james.kluesener@calpine.com

Permit Contact Person

Name: JOANN EDGAR
Title: EHS SPECIALIST III
Phone: (717) 456 - 2446 Email: joann.edgar@calpine.com

[Signature] _____
MARK J. WEJKSZNER, NORTHEAST REGION AIR PROGRAM MANAGER

SECTION A. Table of Contents

Section A. Facility/Source Identification

Table of Contents
Site Inventory List

Section B. General Title V Requirements

#001 Definitions
#002 Prohibition of Air Pollution
#003 Property Rights
#004 Permit Expiration
#005 Permit Renewal
#006 Transfer of Ownership or Operational Control
#007 Inspection and Entry
#008 Compliance Requirements
#009 Need to Halt or Reduce Activity Not a Defense
#010 Duty to Provide Information
#011 Reopening and Revising the Title V Permit for Cause
#012 Reopening a Title V Permit for Cause by EPA
#013 Operating Permit Application Review by the EPA
#014 Significant Operating Permit Modifications
#015 Minor Operating Permit Modifications
#016 Administrative Operating Permit Amendments
#017 Severability Clause
#018 Fee Payment
#019 Authorization for De Minimis Emission Increases
#020 Reactivation of Sources
#021 Circumvention
#022 Submissions
#023 Sampling, Testing and Monitoring Procedures
#024 Compliance Certification
#025 Recordkeeping Requirements
#026 Reporting Requirements
#027 Operational Flexibility
#028 Risk Management
#029 Approved Economic Incentives and Emission Trading Programs
#030 Permit Shield
#031 Reporting
#032 Report Format

Section C. Site Level Title V Requirements

C-I: Restrictions
C-II: Testing Requirements
C-III: Monitoring Requirements
C-IV: Recordkeeping Requirements
C-V: Reporting Requirements
C-VI: Work Practice Standards
C-VII: Additional Requirements
C-VIII: Compliance Certification
C-IX: Compliance Schedule

Section D. Source Level Title V Requirements

D-I: Restrictions
D-II: Testing Requirements
D-III: Monitoring Requirements
D-IV: Recordkeeping Requirements
D-V: Reporting Requirements

SECTION A. Table of Contents

D-VI: Work Practice Standards
D-VII: Additional Requirements

Note: These same sub-sections are repeated for each source!

Section E. Source Group Restrictions

E-I: Restrictions
E-II: Testing Requirements
E-III: Monitoring Requirements
E-IV: Recordkeeping Requirements
E-V: Reporting Requirements
E-VI: Work Practice Standards
E-VII: Additional Requirements

Section F. Alternative Operating Scenario(s)

F-I: Restrictions
F-II: Testing Requirements
F-III: Monitoring Requirements
F-IV: Recordkeeping Requirements
F-V: Reporting Requirements
F-VI: Work Practice Standards
F-VII: Additional Requirements

Section G. Emission Restriction Summary

Section H. Miscellaneous

SECTION A. Site Inventory List

Source ID	Source Name	Capacity/Throughput		Fuel/Material
031	UNIT 1 COMBUSTION TURBINE	1,637.000	MMBTU/HR	
032	UNIT 2 COMBUSTION TURBINE	1,637.000	MMBTU/HR	
033	UNIT 3 COMBUSTION TURBINE	1,637.000	MMBTU/HR	
035	UNIT 5 COMBUSTION TURBINE	1,637.000	MMBTU/HR	
036	UNIT 6 COMBUSTION TURBINE	1,637.000	MMBTU/HR	
037	UNIT 7 COMBUSTION TURBINE	1,637.000	MMBTU/HR	
040	BLOCK 1 COOLING TOWER			
080	BLOCK 2 COOLING TOWER			
101	TWO (2) DISTILLATE FUEL STORAGE TANKS			
200	EMERGENCY CAT GENERATOR (GP9)			
C01	SELECTIVE CATALYTIC REDUCTION			
C02	SELECTIVE CATALYTIC REDUCTION			
C03	SELECTIVE CATALYTIC REDUCTION			
C05	SELECTIVE CATALYTIC REDUCTION			
C06	SELECTIVE CATALYTIC REDUCTION			
C07	SELECTIVE CATALYTIC REDUCTION			
FML01	NATURAL GAS			
FML02	4 MM GALLON DISTILLATE FUEL TANK			
FML03	4 MM GALLON DISTILLATE FUEL TANK			
FML04	2500 GALLON DIESEL FUEL TANK			
S01	UNIT 1 1SC STACK			
S02	UNIT 2 2SC STACK			
S03	UNIT 3 3SC STACK			
S05	UNIT 5 5SC STACK			
S06	UNIT 6 6SC STACK			
S07	UNIT 7 7SC STACK			
S11	UNIT 1 1CC STACK			
S12	UNIT 2 2CC STACK			
S13	UNIT 3 3CC STACK			
S15	UNIT 5 5CC STACK			
S16	UNIT 6 6CC STACK			
S17	UNIT 7 7CC STACK			
S200	EMERGENCY GENERATOR STACK			
S21	BLOCK 1 COOLING TOWER STACK			
S22	BLOCK 2 COOLING TOWER STACK			
Z01	FUGITIVE EMISSIONS			

PERMIT MAPS

PERMIT MAPS

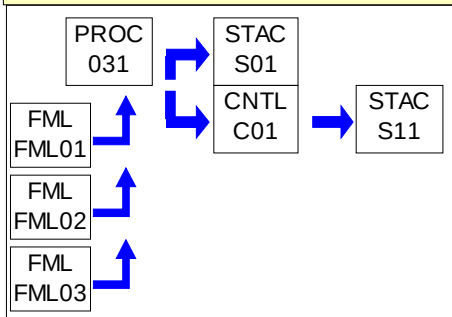
PROC 031
STAC S01
CNTL C01
STAC S11
FML FML01
FML FML02
FML FML03

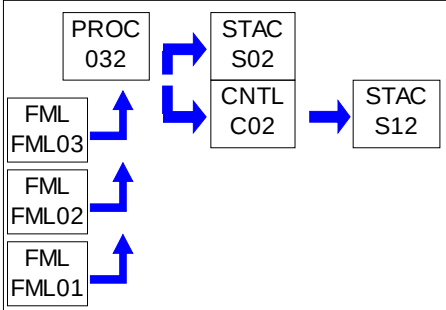
PROC 032
STAC S02
CNTL C02
STAC S12
FML FML03
FML FML02
FML FML01

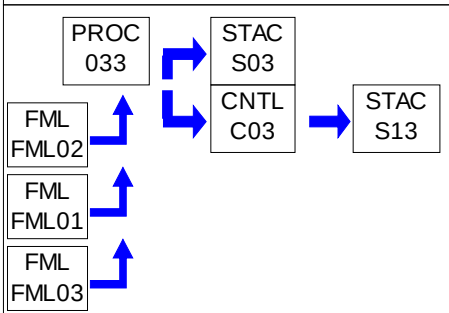
PROC 033
STAC S03
CNTL C03
STAC S13
FML FML02
FML FML01
FML FML03

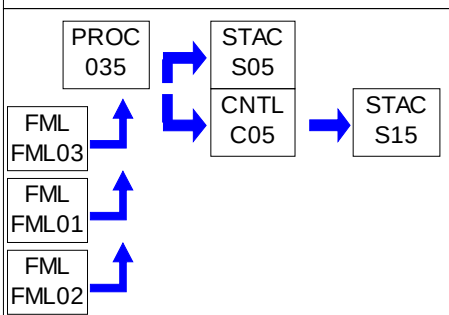
PROC 035
STAC S05
CNTL C05
STAC S15
FML FML03
FML FML01
FML FML02

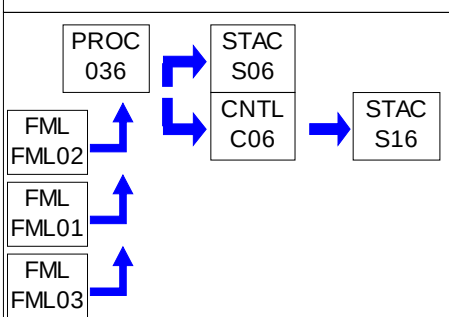
PROC 036
STAC S06
CNTL C06
STAC S16
FML FML02
FML FML01
FML FML03

PERMIT MAPS

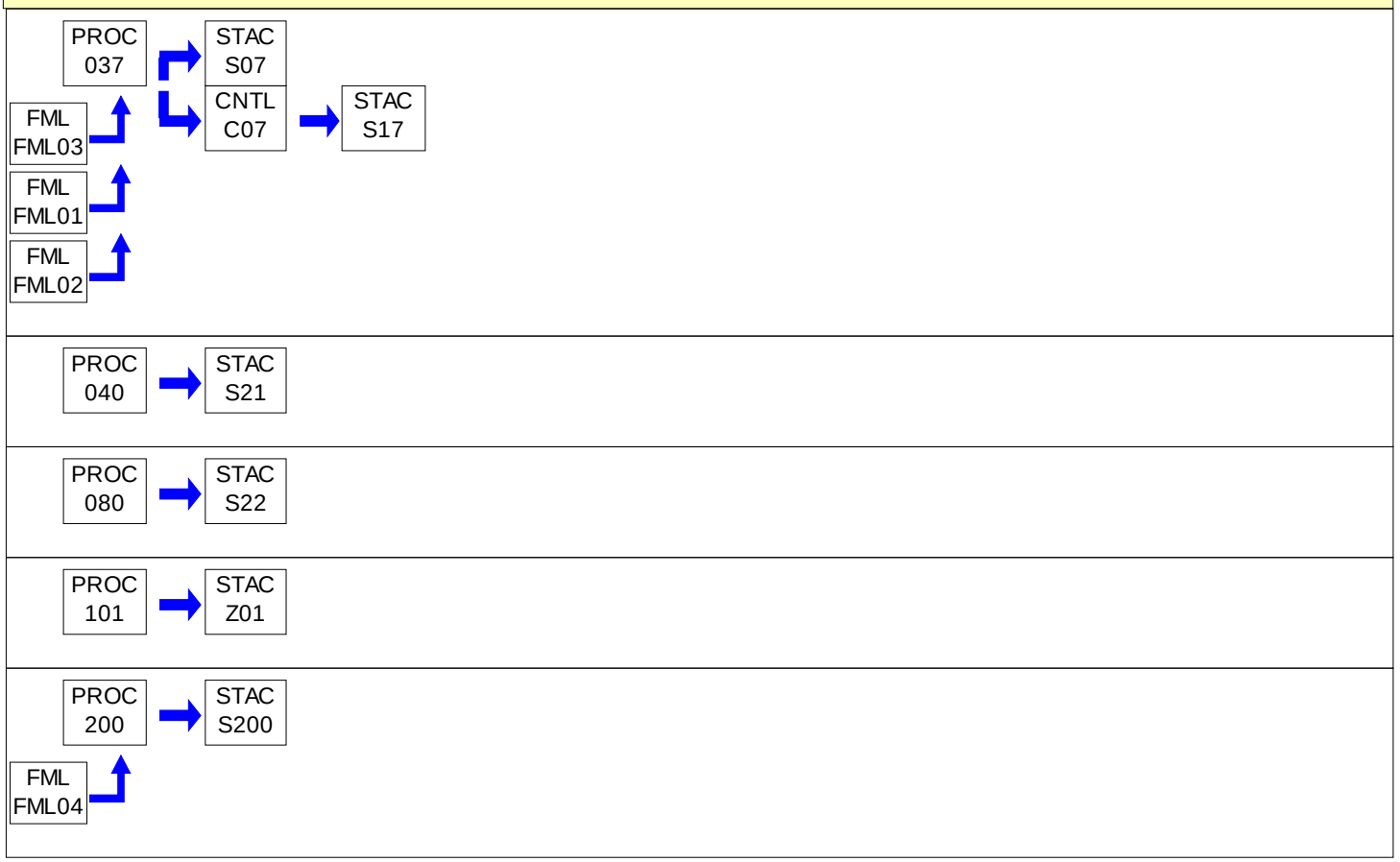
PROC 037
STAC S07
CNTL C07
STAC S17
FML FML03
FML FML01
FML FML02
PROC 040
STAC S21
PROC 080
STAC S22
PROC 101
STAC Z01
PROC 200
STAC S200
FML FML04

SECTION B. General Title V Requirements

#001 [25 Pa. Code § 121.1]

Definitions

Words and terms that are not otherwise defined in this permit shall have the meanings set forth in Section 3 of the Air Pollution Control Act (35 P.S. § 4003) and 25 Pa. Code § 121.1.

#002 [25 Pa. Code § 121.7]

Prohibition of Air Pollution

No person may permit air pollution as that term is defined in the Air Pollution Control Act (35 P.S. §§ 4001-4015).

#003 [25 Pa. Code § 127.512(c)(4)]

Property Rights

This permit does not convey property rights of any sort, or any exclusive privileges.

#004 [25 Pa. Code § 127.446(a) and (c)]

Permit Expiration

This operating permit is issued for a fixed term of five (5) years and shall expire on the date specified on Page 1 of this permit. The terms and conditions of the expired permit shall automatically continue pending issuance of a new Title V permit, provided the permittee has submitted a timely and complete application and paid applicable fees required under 25 Pa. Code Chapter 127, Subchapter I and the Department is unable, through no fault of the permittee, to issue or deny a new permit before the expiration of the previous permit. An application is complete if it contains sufficient information to begin processing the application, has the applicable sections completed and has been signed by a responsible official.

#005 [25 Pa. Code §§ 127.412, 127.413, 127.414, 127.446(e), 127.503 & 127.704(b)]

Permit Renewal

(a) An application for the renewal of the Title V permit shall be submitted to the Department at least six (6) months, and not more than 18 months, before the expiration date of this permit. The renewal application is timely if a complete application is submitted to the Department's Regional Air Manager within the timeframe specified in this permit condition.

(b) The application for permit renewal shall include the current permit number, the appropriate permit renewal fee, a description of any permit revisions and off-permit changes that occurred during the permit term, and any applicable requirements that were promulgated and not incorporated into the permit during the permit term. The fees shall be made payable to "The Commonwealth of Pennsylvania Clean Air Fund" and submitted with the fee form to the respective regional office.

(c) The renewal application shall also include submission of proof that the local municipality and county, in which the facility is located, have been notified in accordance with 25 Pa. Code § 127.413. The application for renewal of the Title V permit shall also include submission of compliance review forms which have been used by the permittee to update information submitted in accordance with either 25 Pa. Code § 127.412(b) or § 127.412(j).

(d) The permittee, upon becoming aware that any relevant facts were omitted or incorrect information was submitted in the permit application, shall promptly submit such supplementary facts or corrected information during the permit renewal process. The permittee shall also promptly provide additional information as necessary to address any requirements that become applicable to the source after the date a complete renewal application was submitted but prior to release of a draft permit.

#006 [25 Pa. Code §§ 127.450(a)(4) & 127.464(a)]

Transfer of Ownership or Operational Control

(a) In accordance with 25 Pa. Code § 127.450(a)(4), a change in ownership or operational control of the source shall be treated as an administrative amendment if:

(1) The Department determines that no other change in the permit is necessary;

(2) A written agreement has been submitted to the Department identifying the specific date of the transfer of permit

SECTION B. General Title V Requirements

responsibility, coverage and liability between the current and the new permittee; and,

(3) A compliance review form has been submitted to the Department and the permit transfer has been approved by the Department.

(b) In accordance with 25 Pa. Code § 127.464(a), this permit may not be transferred to another person except in cases of transfer-of-ownership which are documented and approved to the satisfaction of the Department.

#007 [25 Pa. Code § 127.513, 35 P.S. § 4008 and § 114 of the CAA]

Inspection and Entry

(a) Upon presentation of credentials and other documents as may be required by law for inspection and entry purposes, the permittee shall allow the Department of Environmental Protection or authorized representatives of the Department to perform the following:

(1) Enter at reasonable times upon the permittee's premises where a Title V source is located or emissions related activity is conducted, or where records are kept under the conditions of this permit;

(2) Have access to and copy or remove, at reasonable times, records that are kept under the conditions of this permit;

(3) Inspect at reasonable times, facilities, equipment including monitoring and air pollution control equipment, practices, or operations regulated or required under this permit;

(4) Sample or monitor, at reasonable times, substances or parameters, for the purpose of assuring compliance with the permit or applicable requirements as authorized by the Clean Air Act, the Air Pollution Control Act, or the regulations promulgated under the Acts.

(b) Pursuant to 35 P.S. § 4008, no person shall hinder, obstruct, prevent or interfere with the Department or its personnel in the performance of any duty authorized under the Air Pollution Control Act.

(c) Nothing in this permit condition shall limit the ability of the EPA to inspect or enter the premises of the permittee in accordance with Section 114 or other applicable provisions of the Clean Air Act.

#008 [25 Pa. Code §§ 127.25, 127.444, & 127.512(c)(1)]

Compliance Requirements

(a) The permittee shall comply with the conditions of this permit. Noncompliance with this permit constitutes a violation of the Clean Air Act and the Air Pollution Control Act and is grounds for one (1) or more of the following:

(1) Enforcement action

(2) Permit termination, revocation and reissuance or modification

(3) Denial of a permit renewal application

(b) A person may not cause or permit the operation of a source, which is subject to 25 Pa. Code Article III, unless the source(s) and air cleaning devices identified in the application for the plan approval and operating permit and the plan approval issued to the source are operated and maintained in accordance with specifications in the applications and the conditions in the plan approval and operating permit issued by the Department. A person may not cause or permit the operation of an air contamination source subject to 25 Pa. Code Chapter 127 in a manner inconsistent with good operating practices.

(c) For purposes of Sub-condition (b) of this permit condition, the specifications in applications for plan approvals and operating permits are the physical configurations and engineering design details which the Department determines are essential for the permittee's compliance with the applicable requirements in this Title V permit.

SECTION B. General Title V Requirements

#009 [25 Pa. Code § 127.512(c)(2)]

Need to Halt or Reduce Activity Not a Defense

It shall not be a defense for a permittee in an enforcement action that it would have been necessary to halt or reduce the permitted activity in order to maintain compliance with the conditions of this permit.

#010 [25 Pa. Code §§ 127.411(d) & 127.512(c)(5)]

Duty to Provide Information

(a) The permittee shall furnish to the Department, within a reasonable time, information that the Department may request in writing to determine whether cause exists for modifying, revoking and reissuing, or terminating the permit, or to determine compliance with the permit.

(b) Upon request, the permittee shall also furnish to the Department copies of records that the permittee is required to keep by this permit, or for information claimed to be confidential, the permittee may furnish such records directly to the Administrator of EPA along with a claim of confidentiality.

#011 [25 Pa. Code §§ 127.463, 127.512(c)(3) & 127.542]

Reopening and Revising the Title V Permit for Cause

(a) This Title V permit may be modified, revoked, reopened and reissued or terminated for cause. The filing of a request by the permittee for a permit modification, revocation and reissuance, or termination, or of a notification of planned changes or anticipated noncompliance does not stay a permit condition.

(b) This permit may be reopened, revised and reissued prior to expiration of the permit under one or more of the following circumstances:

(1) Additional applicable requirements under the Clean Air Act or the Air Pollution Control Act become applicable to a Title V facility with a remaining permit term of three (3) or more years prior to the expiration date of this permit. The Department will revise the permit as expeditiously as practicable but not later than 18 months after promulgation of the applicable standards or regulations. No such revision is required if the effective date of the requirement is later than the expiration date of this permit, unless the original permit or its terms and conditions has been extended.

(2) Additional requirements, including excess emissions requirements, become applicable to an affected source under the acid rain program. Upon approval by the Administrator of EPA, excess emissions offset plans for an affected source shall be incorporated into the permit.

(3) The Department or the EPA determines that this permit contains a material mistake or inaccurate statements were made in establishing the emissions standards or other terms or conditions of this permit.

(4) The Department or the Administrator of EPA determines that the permit must be revised or revoked to assure compliance with the applicable requirements.

(c) Proceedings to revise this permit shall follow the same procedures which apply to initial permit issuance and shall affect only those parts of this permit for which cause to revise exists. The revision shall be made as expeditiously as practicable.

(d) Regardless of whether a revision is made in accordance with (b)(1) above, the permittee shall meet the applicable standards or regulations promulgated under the Clean Air Act within the time frame required by standards or regulations.

#012 [25 Pa. Code § 127.543]

Reopening a Title V Permit for Cause by EPA

As required by the Clean Air Act and regulations adopted thereunder, this permit may be modified, reopened and reissued, revoked or terminated for cause by EPA in accordance with procedures specified in 25 Pa. Code § 127.543.

SECTION B. General Title V Requirements

#013 [25 Pa. Code § 127.522(a)]

Operating Permit Application Review by the EPA

The applicant may be required by the Department to provide a copy of the permit application, including the compliance plan, directly to the Administrator of the EPA. Copies of title V permit applications to EPA, pursuant to 25 PA Code §127.522(a), shall be submitted, if required, to the following EPA e-mail box:

R3_Air_Apps_and_Notices@epa.gov

Please place the following in the subject line: TV [permit number], [Facility Name].

#014 [25 Pa. Code § 127.541]

Significant Operating Permit Modifications

When permit modifications during the term of this permit do not qualify as minor permit modifications or administrative amendments, the permittee shall submit an application for significant Title V permit modifications in accordance with 25 Pa. Code § 127.541. Notifications to EPA, pursuant to 25 PA Code §127.522(a), if required, shall be submitted, to the following EPA e-mail box:

R3_Air_Apps_and_Notices@epa.gov

Please place the following in the subject line: TV [permit number], [Facility Name].

#015 [25 Pa. Code §§ 121.1 & 127.462]

Minor Operating Permit Modifications

The permittee may make minor operating permit modifications (as defined in 25 Pa. Code §121.1), on an expedited basis, in accordance with 25 Pa. Code §127.462 (relating to minor operating permit modifications). Notifications to EPA, pursuant to 25 PA Code §127.462(c), if required, shall be submitted, to the following EPA e-mail box:

R3_Air_Apps_and_Notices@epa.gov

Please place the following in the subject line: TV [permit number], [Facility Name].

#016 [25 Pa. Code § 127.450]

Administrative Operating Permit Amendments

(a) The permittee may request administrative operating permit amendments, as defined in 25 Pa. Code §127.450(a). Copies of request for administrative permit amendment to EPA, pursuant to 25 PA Code §127.450(c)(1), if required, shall be submitted to the following EPA e-mail box:

R3_Air_Apps_and_Notices@epa.gov

Please place the following in the subject line: TV [permit number], [Facility Name].

(b) Upon final action by the Department granting a request for an administrative operating permit amendment covered under §127.450(a)(5), the permit shield provisions in 25 Pa. Code § 127.516 (relating to permit shield) shall apply to administrative permit amendments incorporated in this Title V Permit in accordance with §127.450(c), unless precluded by the Clean Air Act or the regulations thereunder.

#017 [25 Pa. Code § 127.512(b)]

Severability Clause

The provisions of this permit are severable, and if any provision of this permit is determined by the Environmental Hearing Board or a court of competent jurisdiction, or US EPA to be invalid or unenforceable, such a determination will not affect the remaining provisions of this permit.

SECTION B. General Title V Requirements

#018 [25 Pa. Code §§ 127.704, 127.705 & 127.707]

Fee Payment

(a) The permittee shall pay fees to the Department in accordance with the applicable fee schedules in 25 Pa. Code Chapter 127, Subchapter I (relating to plan approval and operating permit fees). The applicable fees shall be made payable to "The Commonwealth of Pennsylvania Clean Air Fund" with the permit number clearly indicated and submitted to the respective regional office.

(b) Emission Fees. The permittee shall, on or before September 1st of each year, pay applicable annual Title V emission fees for emissions occurring in the previous calendar year as specified in 25 Pa. Code § 127.705. The permittee is not required to pay an emission fee for emissions of more than 4,000 tons of each regulated pollutant emitted from the facility.

(c) As used in this permit condition, the term "regulated pollutant" is defined as a VOC, each pollutant regulated under Sections 111 and 112 of the Clean Air Act and each pollutant for which a National Ambient Air Quality Standard has been promulgated, except that carbon monoxide is excluded.

(d) Late Payment. Late payment of emission fees will subject the permittee to the penalties prescribed in 25 Pa. Code § 127.707 and may result in the suspension or termination of the Title V permit. The permittee shall pay a penalty of fifty percent (50%) of the fee amount, plus interest on the fee amount computed in accordance with 26 U.S.C.A. § 6621(a)(2) from the date the emission fee should have been paid in accordance with the time frame specified in 25 Pa. Code § 127.705(c).

(e) The permittee shall pay an annual operating permit maintenance fee according to the following fee schedule established in 25 Pa. Code § 127.704(d) on or before December 31 of each year for the next calendar year.

(1) Eight thousand dollars ($8,000) for calendar years 2021—2025.

(2) Ten thousand dollars ($10,000) for calendar years 2026—2030.

(3) Twelve thousand five hundred dollars ($12,500) for the calendar years beginning with 2031.

#019 [25 Pa. Code §§ 127.14(b) & 127.449]

Authorization for De Minimis Emission Increases

(a) This permit authorizes de minimis emission increases from a new or existing source in accordance with 25 Pa. Code §§ 127.14 and 127.449 without the need for a plan approval or prior issuance of a permit modification. The permittee shall provide the Department with seven (7) days prior written notice before commencing any de minimis emissions increase that would result from either: (1) a physical change of minor significance under § 127.14(c)(1); or (2) the construction, installation, modification or reactivation of an air contamination source. The written notice shall:

(1) Identify and describe the pollutants that will be emitted as a result of the de minimis emissions increase.

(2) Provide emission rates expressed in tons per year and in terms necessary to establish compliance consistent with any applicable requirement.

The Department may disapprove or condition de minimis emission increases at any time.

(b) Except as provided below in (c) and (d) of this permit condition, the permittee is authorized during the term of this permit to make de minimis emission increases (expressed in tons per year) up to the following amounts without the need for a plan approval or prior issuance of a permit modification:

(1) Four tons of carbon monoxide from a single source during the term of the permit and 20 tons of carbon monoxide at the facility during the term of the permit.

(2) One ton of NOx from a single source during the term of the permit and 5 tons of NOx at the facility during the term of the permit.

(3) One and six-tenths tons of the oxides of sulfur from a single source during the term of the permit and 8.0 tons of

SECTION B. General Title V Requirements

oxides of sulfur at the facility during the term of the permit.

(4) Six-tenths of a ton of PM10 from a single source during the term of the permit and 3.0 tons of PM10 at the facility during the term of the permit. This shall include emissions of a pollutant regulated under Section 112 of the Clean Air Act unless precluded by the Clean Air Act or 25 Pa. Code Article III.

(5) One ton of VOCs from a single source during the term of the permit and 5.0 tons of VOCs at the facility during the term of the permit. This shall include emissions of a pollutant regulated under Section 112 of the Clean Air Act unless precluded by the Clean Air Act or 25 Pa. Code Article III.

(c) In accordance with § 127.14, the permittee may install the following minor sources without the need for a plan approval:

(1) Air conditioning or ventilation systems not designed to remove pollutants generated or released from other sources.

(2) Combustion units rated at 2,500,000 or less Btu per hour of heat input.

(3) Combustion units with a rated capacity of less than 10,000,000 Btu per hour heat input fueled by natural gas supplied by a public utility, liquefied petroleum gas or by commercial fuel oils which are No. 2 or lighter, viscosity less than or equal to 5.82 c St, and which meet the sulfur content requirements of 25 Pa. Code § 123.22 (relating to combustion units). For purposes of this permit, commercial fuel oil shall be virgin oil which has no reprocessed, recycled or waste material added.

(4) Space heaters which heat by direct heat transfer.

(5) Laboratory equipment used exclusively for chemical or physical analysis.

(6) Other sources and classes of sources determined to be of minor significance by the Department.

(d) This permit does not authorize de minimis emission increases if the emissions increase would cause one or more of the following:

(1) Increase the emissions of a pollutant regulated under Section 112 of the Clean Air Act except as authorized in Subparagraphs (b)(4) and (5) of this permit condition.

(2) Subject the facility to the prevention of significant deterioration requirements in 25 Pa. Code Chapter 127, Subchapter D and/or the new source review requirements in Subchapter E.

(3) Violate any applicable requirement of the Air Pollution Control Act, the Clean Air Act, or the regulations promulgated under either of the acts.

(4) Changes which are modifications under any provision of Title I of the Clean Air Act and emission increases which would exceed the allowable emissions level (expressed as a rate of emissions or in terms of total emissions) under the Title V permit.

(e) Unless precluded by the Clean Air Act or the regulations thereunder, the permit shield described in 25 Pa. Code § 127.516 (relating to permit shield) shall extend to the changes made under 25 Pa. Code § 127.449 (relating to de minimis emission increases).

(f) Emissions authorized under this permit condition shall be included in the monitoring, recordkeeping and reporting requirements of this permit.

(g) Except for de minimis emission increases allowed under this permit, 25 Pa. Code § 127.449, or sources and physical changes meeting the requirements of 25 Pa. Code § 127.14, the permittee is prohibited from making physical changes or engaging in activities that are not specifically authorized under this permit without first applying for a plan approval. In accordance with § 127.14(b), a plan approval is not required for the construction, modification, reactivation, or installation of the sources creating the de minimis emissions increase.

SECTION B. General Title V Requirements

(h) The permittee may not meet de minimis emission threshold levels by offsetting emission increases or decreases at the same source.

#020 [25 Pa. Code §§ 127.11a & 127.215]

Reactivation of Sources

(a) The permittee may reactivate a source at the facility that has been out of operation or production for at least one year, but less than or equal to five (5) years, if the source is reactivated in accordance with the requirements of 25 Pa. Code §§ 127.11a and 127.215. The reactivated source will not be considered a new source.

(b) A source which has been out of operation or production for more than five (5) years but less than 10 years may be reactivated and will not be considered a new source if the permittee satisfies the conditions specified in 25 Pa. Code § 127.11a(b).

#021 [25 Pa. Code §§ 121.9 & 127.216]

Circumvention

(a) The owner of this Title V facility, or any other person, may not circumvent the new source review requirements of 25 Pa. Code Chapter 127, Subchapter E by causing or allowing a pattern of ownership or development, including the phasing, staging, delaying or engaging in incremental construction, over a geographic area of a facility which, except for the pattern of ownership or development, would otherwise require a permit or submission of a plan approval application.

(b) No person may permit the use of a device, stack height which exceeds good engineering practice stack height, dispersion technique or other technique which, without resulting in reduction of the total amount of air contaminants emitted, conceals or dilutes an emission of air contaminants which would otherwise be in violation of this permit, the Air Pollution Control Act or the regulations promulgated thereunder, except that with prior approval of the Department, the device or technique may be used for control of malodors.

#022 [25 Pa. Code §§ 127.402(d) & 127.513(1)]

Submissions

(a) Reports, test data, monitoring data, notifications and requests for renewal of the permit shall be submitted to the:

Regional Air Program Manager
PA Department of Environmental Protection
(At the address given on the permit transmittal letter, or otherwise notified)

(b) Any report or notification for the EPA Administrator or EPA Region III should be addressed to:

Enforcement & Compliance Assurance Division
Air, RCRA and Toxics Branch (3ED21)
Four Penn Center
1600 John F. Kennedy Boulevard
Philadelphia, PA 19103-2852

The Title V compliance certification shall be emailed to EPA at R3_APD_Permits@epa.gov.

(c) An application, form, report or compliance certification submitted pursuant to this permit condition shall contain certification by a responsible official as to truth, accuracy, and completeness as required under 25 Pa. Code § 127.402(d). Unless otherwise required by the Clean Air Act or regulations adopted thereunder, this certification and any other certification required pursuant to this permit shall state that, based on information and belief formed after reasonable inquiry, the statements and information in the document are true, accurate and complete.

#023 [25 Pa. Code §§ 127.441(c) & 127.463(e); Chapter 139; & 114(a)(3), 504(b) of the CAA]

Sampling, Testing and Monitoring Procedures

(a) The permittee shall perform the emissions monitoring and analysis procedures or test methods for applicable requirements of this Title V permit. In addition to the sampling, testing and monitoring procedures specified in this

SECTION B. General Title V Requirements

permit, the Permittee shall comply with any additional applicable requirements promulgated under the Clean Air Act after permit issuance regardless of whether the permit is revised.

(b) The sampling, testing and monitoring required under the applicable requirements of this permit, shall be conducted in accordance with the requirements of 25 Pa. Code Chapter 139 unless alternative methodology is required by the Clean Air Act (including §§ 114(a)(3) and 504(b)) and regulations adopted thereunder.

#024 [25 Pa. Code § 127.513]

Compliance Certification

(a) One year after the date of issuance of the Title V permit, and each year thereafter, unless specified elsewhere in the permit, the permittee shall submit to the Department and EPA Region III a certificate of compliance with the terms and conditions in this permit, for the previous year, including the emission limitations, standards or work practices.
This certification shall include:

(1) The identification of each term or condition of the permit that is the basis of the certification.
(2) The compliance status.
(3) The methods used for determining the compliance status of the source, currently and over the reporting period.
(4) Whether compliance was continuous or intermittent.

(b) The compliance certification shall be postmarked or hand-delivered no later than thirty days after each anniversary of the date of issuance of this Title V Operating Permit, or on the submittal date specified elsewhere in the permit, to the Department in accordance with the submission requirements specified in Section B, Condition #022 of this permit.
The Title V compliance certification shall be emailed to EPA at R3_APD_Permits@epa.gov.

#025 [25 Pa. Code §§ 127.511 & Chapter 135]

Recordkeeping Requirements

(a) The permittee shall maintain and make available, upon request by the Department, records of required monitoring information that include the following:

(1) The date, place (as defined in the permit) and time of sampling or measurements.

(2) The dates the analyses were performed.

(3) The company or entity that performed the analyses.

(4) The analytical techniques or methods used.

(5) The results of the analyses.

(6) The operating conditions as existing at the time of sampling or measurement.

(b) The permittee shall retain records of the required monitoring data and supporting information for at least five (5) years from the date of the monitoring sample, measurement, report or application. Supporting information includes the calibration data and maintenance records and original strip-chart recordings for continuous monitoring instrumentation, and copies of reports required by the permit.

(c) The permittee shall maintain and make available to the Department upon request, records including computerized records that may be necessary to comply with the reporting, recordkeeping and emission statement requirements in 25 Pa. Code Chapter 135 (relating to reporting of sources). In accordance with 25 Pa. Code Chapter 135, § 135.5, such records may include records of production, fuel usage, maintenance of production or pollution control equipment or other information determined by the Department to be necessary for identification and quantification of potential and actual air contaminant emissions. If direct recordkeeping is not possible or practical, sufficient records shall be kept to provide the needed information by indirect means.

SECTION B. General Title V Requirements

#026 [25 Pa. Code §§ 127.411(d), 127.442, 127.463(e) & 127.511(c)]

Reporting Requirements

(a) The permittee shall comply with the reporting requirements for the applicable requirements specified in this Title V permit. In addition to the reporting requirements specified herein, the permittee shall comply with any additional applicable reporting requirements promulgated under the Clean Air Act after permit issuance regardless of whether the permit is revised.

(b) Pursuant to 25 Pa. Code § 127.511(c), the permittee shall submit reports of required monitoring at least every six (6) months unless otherwise specified in this permit. Instances of deviations (as defined in 25 Pa. Code § 121.1) from permit requirements shall be clearly identified in the reports. The reporting of deviations shall include the probable cause of the deviations and corrective actions or preventative measures taken, except that sources with continuous emission monitoring systems shall report according to the protocol established and approved by the Department for the source. The required reports shall be certified by a responsible official.

(c) Every report submitted to the Department under this permit condition shall comply with the submission procedures specified in Section B, Condition #022(c) of this permit.

(d) Any records, reports or information obtained by the Department or referred to in a public hearing shall be made available to the public by the Department except for such records, reports or information for which the permittee has shown cause that the documents should be considered confidential and protected from disclosure to the public under Section 4013.2 of the Air Pollution Control Act and consistent with Sections 112(d) and 114(c) of the Clean Air Act and 25 Pa. Code § 127.411(d). The permittee may not request a claim of confidentiality for any emissions data generated for the Title V facility.

#027 [25 Pa. Code § 127.3]

Operational Flexibility

The permittee is authorized to make changes within the Title V facility in accordance with the following provisions in 25 Pa. Code Chapter 127 which implement the operational flexibility requirements of Section 502(b)(10) of the Clean Air Act and Section 6.1(i) of the Air Pollution Control Act:

(1) Section 127.14 (relating to exemptions)

(2) Section 127.447 (relating to alternative operating scenarios)

(3) Section 127.448 (relating to emissions trading at facilities with federally enforceable emissions caps)

(4) Section 127.449 (relating to de minimis emission increases)

(5) Section 127.450 (relating to administrative operating permit amendments)

(6) Section 127.462 (relating to minor operating permit amendments)

(7) Subchapter H (relating to general plan approvals and operating permits)

#028 [25 Pa. Code §§ 127.441(d), 127.512(i) and 40 CFR Part 68]

Risk Management

(a) If required by Section 112(r) of the Clean Air Act, the permittee shall develop and implement an accidental release program consistent with requirements of the Clean Air Act, 40 CFR Part 68 (relating to chemical accident prevention provisions) and the Federal Chemical Safety Information, Site Security and Fuels Regulatory Relief Act (P.L. 106-40).

(b) The permittee shall prepare and implement a Risk Management Plan (RMP) which meets the requirements of Section 112(r) of the Clean Air Act, 40 CFR Part 68 and the Federal Chemical Safety Information, Site Security and Fuels Regulatory Relief Act when a regulated substance listed in 40 CFR § 68.130 is present in a process in more than the listed threshold quantity at the Title V facility. The permittee shall submit the RMP to the federal Environmental Protection Agency according to the following schedule and requirements:

(1) The permittee shall submit the first RMP to a central point specified by EPA no later than the latest of the following:

SECTION B. General Title V Requirements

(i) Three years after the date on which a regulated substance is first listed under § 68.130; or,
(ii) The date on which a regulated substance is first present above a threshold quantity in a process.

(2) The permittee shall submit any additional relevant information requested by the Department or EPA concerning the RMP and shall make subsequent submissions of RMPs in accordance with 40 CFR § 68.190.

(3) The permittee shall certify that the RMP is accurate and complete in accordance with the requirements of 40 CFR Part 68, including a checklist addressing the required elements of a complete RMP.

(c) As used in this permit condition, the term "process" shall be as defined in 40 CFR § 68.3. The term "process" means any activity involving a regulated substance including any use, storage, manufacturing, handling, or on-site movement of such substances or any combination of these activities. For purposes of this definition, any group of vessels that are interconnected, or separate vessels that are located such that a regulated substance could be involved in a potential release, shall be considered a single process.

(d) If the Title V facility is subject to 40 CFR Part 68, as part of the certification required under this permit, the permittee shall:

(1) Submit a compliance schedule for satisfying the requirements of 40 CFR Part 68 by the date specified in 40 CFR § 68.10(a); or,

(2) Certify that the Title V facility is in compliance with all requirements of 40 CFR Part 68 including the registration and submission of the RMP.

(e) If the Title V facility is subject to 40 CFR Part 68, the permittee shall maintain records supporting the implementation of an accidental release program for five (5) years in accordance with 40 CFR § 68.200.

(f) When the Title V facility is subject to the accidental release program requirements of Section 112(r) of the Clean Air Act and 40 CFR Part 68, appropriate enforcement action will be taken by the Department if:

(1) The permittee fails to register and submit the RMP or a revised plan pursuant to 40 CFR Part 68.

(2) The permittee fails to submit a compliance schedule or include a statement in the compliance certification required under Section B, Condition #026 of this permit that the Title V facility is in compliance with the requirements of Section 112(r) of the Clean Air Act, 40 CFR Part 68, and 25 Pa. Code § 127.512(i).

#029 [25 Pa. Code § 127.512(e)]

Approved Economic Incentives and Emission Trading Programs

No permit revision shall be required under approved economic incentives, marketable permits, emissions trading and other similar programs or processes for changes that are provided for in this Title V permit.

#030 [25 Pa. Code §§ 127.516, 127.450(d), 127.449(f) & 127.462(g)]

Permit Shield

(a) The permittee's compliance with the conditions of this permit shall be deemed in compliance with applicable requirements (as defined in 25 Pa. Code § 121.1) as of the date of permit issuance if either of the following applies:

(1) The applicable requirements are included and are specifically identified in this permit.

(2) The Department specifically identifies in the permit other requirements that are not applicable to the permitted facility or source.

(b) Nothing in 25 Pa. Code § 127.516 or the Title V permit shall alter or affect the following:

(1) The provisions of Section 303 of the Clean Air Act, including the authority of the Administrator of the EPA provided thereunder.

(2) The liability of the permittee for a violation of an applicable requirement prior to the time of permit issuance.

SECTION B. General Title V Requirements

(3) The applicable requirements of the acid rain program, consistent with Section 408(a) of the Clean Air Act.

(4) The ability of the EPA to obtain information from the permittee under Section 114 of the Clean Air Act.

(c) Unless precluded by the Clean Air Act or regulations thereunder, final action by the Department incorporating a significant permit modification in this Title V Permit shall be covered by the permit shield at the time that the permit containing the significant modification is issued.

#031 [25 Pa. Code §135.3]

Reporting

(a) The permittee shall submit by March 1 of each year an annual emissions report for the preceding calendar year. The report shall include information for all active previously reported sources, new sources which were first operated during the preceding calendar year, and sources modified during the same period which were not previously reported. All air emissions from the facility should be estimated and reported.

(b) A source owner or operator may request an extension of time from the Department for the filing of an annual emissions report, and the Department may grant the extension for reasonable cause.

#032 [25 Pa. Code §135.4]

Report Format

Emissions reports shall contain sufficient information to enable the Department to complete its emission inventory. Emissions reports shall be made by the source owner or operator in a format specified by the Department.

SECTION C. Site Level Requirements

I. RESTRICTIONS.

Emission Restriction(s).

 # 001 [25 Pa. Code §123.1]
Prohibition of certain fugitive emissions

(a) No person may permit the emission into the outdoor atmosphere of fugitive air contaminant from a source other than the following:
(1) Construction or demolition of buildings or structures.
(2) Grading, paving and maintenance of roads and streets.
(3) Use of roads and streets. Emissions from material in or on trucks, railroad cars and other vehicular equipment are not considered as emissions from use of roads and streets.
(4) Clearing of land.
(5) Stockpiling of materials.
(6) Open burning operations.
(7) N/A.
(8) N/A.
(9) Sources and classes of sources other than those identified in paragraphs (1)-(8), for which the operator has obtained a determination from the Department that fugitive emissions from the source, after appropriate control, meet the following requirements:
(i) the emissions are of minor significance with respect to causing air pollution; and
(ii) the emissions are not preventing or interfering with the attainment or maintenance of any ambient air quality standard.

 # 002 [25 Pa. Code §123.2]
Fugitive particulate matter
The permittee may not permit fugitive particulate matter to be emitted into the outdoor atmosphere from a source specified in Site Level Condition #001 (relating to prohibition of certain fugitive emissions) if such emissions are visible at the point the emissions pass outside the person's property.

 # 003 [25 Pa. Code §123.31]
Limitations
MALODOR EMISSIONS

The permittee may not permit the emission into the outdoor atmosphere of any malodorous air contaminants from any source in such a manner that the malodors are detectable outside the property of the person on whose land the source is being operated.

 # 004 [25 Pa. Code §123.41]
Limitations
VISIBLE EMISSIONS

(a) The permittee may not permit the emission into the outdoor atmosphere of visible air contaminants in such a manner that the opacity of the emission is either of the following:

(1) Equal to or greater than 20% for a period or periods aggregating more than three minutes in any 1 hour.
(2) Equal to or greater than 60% at any time.

(b) The limitations of paragraph (a) shall not apply to a visible emission in any of the following instances:

(1) When the presence of uncombined water is the only reason for failure of the emission to meet the limitations.
(2) When the emission results from the operation of equipment used solely to train and test persons in observing the opacity of visible emissions.
(3) When the emission results from sources specified in Site Level Condition #001 (relating to prohibition of certain fugitive emissions).

 # 005 [25 Pa. Code §127.512]
Operating permit terms and conditions.
Total facility emissions from respective sources including emissions during start-ups and shutdowns shall not exceed the following limits during any consecutive 12-month rolling period:

SECTION C. Site Level Requirements

Facility Emission Limits in tons per year

Pollutant	Gas Turbines (All)	Cooling Towers	Fuel Oil Storage	Ancillary Equipment	Facility Total
NOx	171.46				171.46
CO	100.54				100.54
VOC	42.49		0.6	0.6	43.69
PM10	85.01	7.4			92.41
PM2.5	58.61				58.61
SO2	49.13				49.13
Ammonia	444.5				444.5
H2SO4 Mist	46.1				46.1

II. TESTING REQUIREMENTS.

 # 006 [25 Pa. Code §127.511]

Monitoring and related recordkeeping and reporting requirements.

All sampling, testing and analyses performed in compliance with the requirements of any section of this permit shall be done in accordance with SECTION B, General Title V Requirement #023.

 # 007 [25 Pa. Code §127.511]

Monitoring and related recordkeeping and reporting requirements.

If requested by the Department, the permittee shall perform a stack test, in accordance with the provisions of the most current publication of the DEP Source Testing Manual and Chapter 139 of the Rules and Regulations of the Department of Environmental Protection, within the time frame specified by the Department.

III. MONITORING REQUIREMENTS.

 # 008 [25 Pa. Code §123.43]

Measuring techniques

Visible emissions may be measured using either of the following:

(1) A device approved by the Department and maintained to provide accurate opacity measurements.
(2) Observers, trained and qualified to measure plume opacity with the naked eye or with the aid of any devices approved by the Department.

 # 009 [25 Pa. Code §127.511]

Monitoring and related recordkeeping and reporting requirements.

FUGITIVE AND VISIBLE EMISSIONS

(a) The permittee shall conduct bi-monthly monitoring of the facility, during daylight hours when the plant is in operation, to check for the presence of fugitive emissions. All instances where fugitive emissions are detected in deviation of Site Level Condition #002 shall be noted, and corrective or preventative action taken.

(b) Visible emission monitoring of the turbines by certified readers shall be performed annually. At all other times, any occurrence of visible emissions (i.e. greater than 0%) during the aforementioned operating situations shall be reported to the Department within four (4) hours of occurrence so that a certified representative of the Department may perform visible emission monitoring of the suspect source(s).

IV. RECORDKEEPING REQUIREMENTS.

 # 010 [25 Pa. Code §127.511]

Monitoring and related recordkeeping and reporting requirements.

All records, reports and analyses results generated in compliance with the requirements of any section of this permit shall be maintained in accordance with SECTION B, General Title V Requirement #025, and shall be made available to the Department upon written or verbal request at a reasonable time.

SECTION C. Site Level Requirements

 # 011 [25 Pa. Code §127.511]
Monitoring and related recordkeeping and reporting requirements.
FUGITIVE AND VISIBLE EMISSIONS

(a) The permittee shall, at the conclusion of each bi-monthly inspection required by Site Level Condition #009, record all occurrences of emissions in exceedance of the fugitive and visible emissions limitations in a log.

(b) The permittee shall record any and all corrective action(s) taken to abate each recorded deviation or prevent future occurrences.

V. REPORTING REQUIREMENTS.

 # 012 [25 Pa. Code §127.511]
Monitoring and related recordkeeping and reporting requirements.
FUGITIVE AND VISIBLE EMISSIONS

(a) On a semi-annual basis, the permittee shall compile a report of all logged instances of deviation of the fugitive or visible emission limitations that occurred and the corrective actions taken in response to them. This report shall be submitted to the Department.

(b) If no deviations have been logged during the reported period, this report shall be retained at the facility and made available to the Department upon request.

 # 013 [25 Pa. Code §127.511]
Monitoring and related recordkeeping and reporting requirements.

(a) The company shall notify the Department, at (610) 861-2070 as soon as practicable but no more than two (2) hours after becoming knowledgeable, of any malfunction, recordkeeping and reporting errors, or other possible non-compliance issues, which result in, or may possibly be resulting in, the emission of air contaminants in excess of the limitations specified in, or established pursuant to, any applicable rule or regulations contained in Article III of the Rules and Regulations of the Department of Environmental Protection.

(b) A written report shall be submitted to the Department within five (5) working days following the incident describing the malfunction, recordkeeping and reporting error or other non-compliance issue and the corrective actions being taken. The Department may take enforcement action for any violations of the applicable standards.

 # 014 [25 Pa. Code §127.513]
Compliance certification.
The reporting period for the certificate of compliance required by SECTION B, General Title V Requirement #024, shall be for the previous calendar year, and it shall be submitted within 60 days after the specified period but no later than March 1st.

 # 015 [25 Pa. Code §135.21]
Emission statements

(a) Except as provided in subsection (d), this section applies to stationary sources or facilities:
(1) Located in an area designated by the Clean Air Act as a marginal, moderate, serious, severe or extreme ozone nonattainment area and which emit oxides of nitrogen or VOC.
(2) Not located in an area described in subparagraph (1) and included in the Northeast ozone Transport Region which emit or have the potential to emit 100 tons or more oxides of nitrogen or 50 tons or more of VOC per year.

(b) The owner or operator of each stationary source emitting oxides of nitrogen or VOC's shall provide the Department with a statement, in a form as the Department may prescribe, for classes or categories of sources, showing the actual emissions of oxides of nitrogen and VOCs from that source for each reporting period, a description of the method used to calculate the emissions and the time period over which the calculation is based. The statement shall contain a certification by a company officer or the plant manager that the information contained in the statement is accurate.

SECTION C. Site Level Requirements

(c) Annual emission statements are due by March 1 for the preceding calendar year beginning with March 1, 1993, for calendar year 1992 and shall provide data consistent with requirements and guidance developed by the EPA. The guidance document is available from: United States Environmental Protection Agency, 401 M. Street, S.W., Washington, D.C. 20460. The Department may require more frequent submittals if the Department determines that one or more of the following applies:
(1) A more frequent submission is required by the EPA.
(2) Analysis of the data on a more frequent basis is necessary to implement the requirements of the act.

(d) Subsection (a) does not apply to a class or category of stationary sources which emits less than 25 tons per year of VOC's or oxides of nitrogen, if the Department in its submissions to the Administrator of the EPA under section 182(a)(1) or (3)(B)(ii) of the Clean Air Act (42 U.S.C.A. 7511a(a)(1) or (3)(B)(ii)) provides an inventory of emissions from the class or category of sources based on the use of the emission factors established by the Administrator or other methods acceptable to the Administrator. The Department will publish in the Pennsylvania Bulletin a notice of the lists of classes or categories of sources which are exempt from the emission statement requirement under this subsection.

 # 016 [25 Pa. Code §135.3]
Reporting

(a) A person who owns or operates a source to which this chapter applies, and who has previously been advised by the Department to submit a source (AIMS) report, shall submit by March 1 of each year a source report for the preceding calendar year. The report shall include information for all previously reported sources, new sources which were first operated during the preceding calendar year and sources modified during the same period which were not previously reported.

(b) A person who receives initial notification by the Department that a source report is necessary shall submit an initial source report within 60 days after receiving the notification or by March 1 of the year following the year for which the report is required, whichever is later.

(c) A source owner or operator may request an extension of time from the Department for the filing of a source report, and the Department may grant the extension for reasonable cause.

VI. WORK PRACTICE REQUIREMENTS.

 # 017 [25 Pa. Code §123.1]
Prohibition of certain fugitive emissions

A person responsible for any source specified in subsections (a)(1) -- (9) shall take all reasonable actions to prevent particulate matter from becoming airborne. These actions shall include, but not be limited to, the following:
(1) Use, where possible, of water or chemicals for control of dust in the demolition of buildings or structures, construction operations, the grading of roads, or the clearing of land.
(2) Application of asphalt, oil, water or suitable chemicals on dirt roads, material stockpiles and other surfaces which may give rise to airborne dusts.
(3) Paving and maintenance of roadways.
(4) Prompt removal of earth or other material from paved streets onto which earth or other material has been transported by trucking or earth moving equipment, erosion by water, or other means.

 # 018 [25 Pa. Code §127.25]
Compliance requirement.

Pursuant to 25 Pa Code §§127.25 and 127.444, the Owner or Operator shall construct, operate, and maintain all sources and air pollution control equipment in accordance with manufacturer's recommendations, as well as good air pollution control practices to ensure compliance with all air quality emission limitations.

 # 019 [25 Pa. Code §129.14]
Open burning operations

Outside of air basins.

(a) The permittee may not permit the open burning of material in an area outside of air basins in a manner that:

SECTION C. Site Level Requirements

(1) The emissions are visible, at any time, at the point such emissions pass outside the property of the person on whose land the open burning is being conducted.
(2) Malodorous air contaminants from the open burning are detectable outside the property of the person on whose land the open burning is being conducted.
(3) The emissions interfere with the reasonable enjoyment of life or property.
(4) The emissions cause damage to vegetation or property.
(5) The emissions are or may be deleterious to human or animal health.

(b) Exceptions: The requirements of subsections (a) do not apply where the open burning operations result from:

(1) A fire set to prevent or abate a fire hazard, when approved by the Department and set by or under the supervision of a public officer.
(2) A fire set for the purpose of instructing personnel in fire fighting, when approved by the Department.
(3) A fire set for the prevention and control of disease or pests, when approved by the Department.

(c) Clearing and grubbing wastes. The following is applicable to clearing and grubbing wastes:
(1) As used in this subsection the following terms shall have the following meanings:

Air curtain destructor -- A mechanical device which forcefully projects a curtain of air across a pit in which open burning is being conducted so that combustion efficiency is increased and smoke and other particulate matter are contained.

Clearing and grubbing wastes -- Trees, shrubs, and other native vegetation which are cleared from land during or prior to the process of construction. The term does not include demolition wastes and dirt laden roots.

(2) Subsection (a) notwithstanding clearing and grubbing wastes may be burned outside of an air basin, subject to the following limitations:

(i) Upon receipt of a complaint or determination by the Department that an air pollution problem exists, the Department may order that the open burning cease or comply with subsection (b) of this section.
(ii) Authorization for open burning under this paragraph does not apply to clearing and grubbing wastes transported from an air basin for disposal outside of an air basin.

(3) During an air pollution episode, open burning is limited by 25 Pa. Code Chapter 137 (relating to air pollution episodes) and shall cease as specified in such chapter.

VII. ADDITIONAL REQUIREMENTS.

 # 020 [25 Pa. Code §121.7]
Prohibition of air pollution.

The permittee may not permit the presence in the outdoor atmosphere of any form of contaminant, including, but not limited to, the discharging from stacks, chimneys, openings, buildings, structures, open fires, vehicles, processes or any other source of any smoke, soot, fly ash, dust, cinders, dirt, noxious or obnoxious acids, fumes, oxides, gases, vapors, odors, toxic, hazardous or radioactive substances, waste or other matter in a place, manner or concentration inimical or which may be inimical to public health, safety or welfare or which is or may be injurious to human, plant or animal life or to property or which unreasonably interferes with the comfortable enjoyment of life or property.

 # 021 [25 Pa. Code §123.101]
Purpose.

The six (6) combustion turbines are subject to the NOx Budget Program requirements established in 25 Pa. Code §§123.102-123.120 and shall comply with all of the following applicable requirements.

(a) §123.112. Source operating permit requirements:
The Owner or Operator shall comply with the requirements of 25 Pa. Code §§123.101-123.120 (relating to NOx allowance requirements).

(b) §123.102. Source NOx allowance requirements and NOx allowance control period:
For each NOx affected source identified in this operating permit, the Owner or Operator shall hold a quantity of NOx

SECTION C. Site Level Requirements

allowances meeting the requirements of 25 Pa. Code §123.110(a) (relating to source compliance requirements) in the source's current year NATS account by December 31st of each calendar year. The NOx allowances shall be equal to or greater than the total NOx emitted from the source during that year's NOx allowance control period.

(c) §123.108. Source emissions monitoring requirements:
(1) The NOx emissions from each NOx affected source at this facility shall be monitored as specified in 25 Pa. Code §123.108 and in accordance with the procedures contained in the document titled "Guidance for Implementation of Emission Monitoring Requirements for the NOx Budget Program."
(2) As referenced in §123.108(2), the Owner or Operator shall submit to the Department and the NOx Budget Administrator a monitoring plan in accordance with the procedures outlined in the document titled "Guidance for Implementation of Emission Monitoring Requirements for the NOx Budget Program."
(3) New and existing unit emission monitoring systems, as required and specified by 25 Pa. Code §123.108(4) and the NOx affected source's monitoring plan approved by the Department, shall be installed and operational. The installed emission monitoring systems shall have met all of the certification testing requirements in accordance with the procedures and deadlines specified in the document titled "Guidance for Implementation of Emission Monitoring Requirements for the NOx Budget Program" in a manner consistent with Chapter 139 (relating to sampling and testing).
(4) Sources subject to 40 CFR Part 75 shall demonstrate compliance with 25 Pa. Code §123.108 by using a certified Part 75 monitoring system.
(5) During a period when valid data is not being recorded by devices approved for use to demonstrate compliance with the NOx Allowance Requirement subchapter, the Owner or Operator shall replace missing or invalid data with representative default data in accordance with 40 CFR Part 75 (relating to continuous emission monitoring) and the document titled "Guidance for Implementation of Emission Monitoring Requirements for the NOx Budget Program." For non-Part 75 sources that have Department approved NOx CEMS reporting of NOx emissions in pounds of NOx per hour as required under 25 Pa. Code §139.101, the data shall be reported to the NETS. The Owner or Operator shall continue to report submissions as required under 25 Pa. Code Chapter 139 to the Department.

(d) §123.108. Source emissions monitoring requirements:
Monitoring systems for each NOx affected source shall comply with the initial performance testing and periodic calibration, accuracy testing and quality assurance/quality control testing as specified in the document titled "Guidance for Implementation of Emission Monitoring Requirements for the NOx Budget Program."

(e) §123.109. Source emissions reporting requirements:
The authorized account representative shall submit to the NOx Budget Administrator, electronically, emissions and operations information for each calendar quarter of each year in accordance with the document titled "Guidance for Implementation of Emission Monitoring Requirements for the NOx Budget Program." The emissions and operations information shall be submitted in a format, which meets the requirements of EPA's Electronic Data Reporting convention.
§123.110. Source compliance requirements.
(1) Each year from November 1st through December 31st, inclusive, the authorized account representative shall request the NOx Budget Administrator to deduct, consistent with §123.107 (relating to NOx allowance transfer procedures), a designated amount of NOx allowances by serial number from the NOx affected source's compliance account in an amount equivalent to the NOx emitted from the NOx affected source during that year's NOx allowance control period. The designated NOx allowances shall be used in accordance with the requirements specified in 25 Pa. Code §123.110.
(2) For each NOx allowance control period, the authorized account representative for the NOx affected source shall submit an annual compliance certification to the Department no later than the NOx allowance transfer deadline (December 31st) of each year.
(3) At a minimum, the compliance certification shall contain the information and statement required under 25 Pa. Code §123.110(e)(1)-(6).

(f) § 123.113. Source recordkeeping requirements:
The Owner or Operator shall maintain for each NOx affected source at this facility, the measurements, data, reports, and other information required by 25 Pa. Code §§123.101-123.120. The records shall be maintained for 5 years or any other period consistent with the terms of the NOx affected source's operating permit.

 # 022 [25 Pa. Code §123.121]
NOx Allowance Program transition.

(a) § 123.121 NOx Allowance Program Transition:

SECTION C. Site Level Requirements

The emission limitations and monitoring requirements established in §§123.101-123.120 (relating to NOx allowance requirements) are replaced by the requirements in Chapter 145 beginning with the May 1, 2003, control period. If a source has failed to demonstrate compliance with §123.111 (relating to failure to meet source compliance requirements), the provisions in §145.54(d) (relating to compliance) shall be used to withhold NOx allowances in calendar year 2003 and beyond. If no NOx allowances are provided to the source under §145.52 (relating to NOx allowance allocations), the source will be obligated to acquire and retire a number of NOx allowances as specified in §145.54.

(b) §§145.1-145.90 NOx Budget Trading Program Incorporation:
The emissions limitations, monitoring and all other requirements of the NOx Budget Trading Program established in 25 Pa. Code §§145.1-145.90 are hereby incorporated by reference.

(c) §145.10 Authorization and responsibilities of the NOx authorized account representative:
(1) [§145.10(a)] Except as provided under §145.11 (relating to alternate NOx authorized account representative), each NOx budget source, including all NOx budget units at the source, shall have one, and only one, NOx authorized account representative, with regard to all matters under the NOx Budget Trading Program concerning the source or any NOx budget unit at the source.
(2) [§145.10(e)] Each submission under the NOx Budget Trading Program shall be submitted, signed and certified by the NOx authorized account representative for each NOx budget source on behalf of which the submission is made.

(d) §145.6(a) Standard requirements- Monitoring requirements:
(1) The owners and operators and the NOx authorized account representative of each NOx budget source and each NOx budget unit at the source shall comply with the monitoring requirements of §§145.70-145-76 (relating to recordkeeping and recording requirements) by May 1, 2002.
(2) The emissions measurements recorded and reported in accordance with §§145.70-145.76 shall be used to determine compliance by the unit with the NOx budget emissions limitation under §145.6(c)

(e) § 145.6(b) Standard requirements-NOx requirements:
(1) The owners and operators of each NOx budget source and each NOx budget unit at the source shall hold NOx allowances available for compliance deductions under §145.54 (relating to compliance), as of the NOx allowance transfer deadline, in the unit's compliance account and the source's overdraft account in an amount not less than the total NOx emissions for the control period from the unit, as determined in accordance with §§145.70-145.76 (relating to recordkeeping and reporting requirements) plus any amount necessary to account for actual heat input under §145.42(e) (relating to NOx allowance allocation) for the control period or to account for excess emissions for a prior control period under §145.54(d) or to account for withdrawal from the NOx budget trading program, or a change in regulatory status, of a NOx budget opt-in unit under §§145.86 and 145.87 (relating to withdrawal from NOx Budget Trading Program; and opt-in source change in regulatory status).
(2) A NOx budget unit shall be subject to the requirements under Paragraph (1) starting on May 1, 2003, or the date on which the unit commences operation, whichever is later.

(f) §145.6(c) Standard requirements- Excess emissions:
The owners and operators of a NOx budget unit that has excess emissions in any control period shall surrender the NOx allowances required for deduction under §145.54(d)(1) (relating to compliance).

(g) §145.6(d) Standard requirements- Recordkeeping and reporting requirements:
Unless otherwise provided, the owners and operators of the NOx budget source and each NOx budget unit at the source shall maintain at a central location and provided upon request by the Department of the NOx budget administrator all documents required under §145.6(d) for a period of 5 years from the date the document is created. This period may be extended for cause, at any time prior to the end of the 5 years, in writing by the Department or the Administrator.

(h) §145.74(b) Standard requirements- Monitoring plans:
(1) The Owner or Operator of a unit subject to an acid rain emissions limitation shall comply with requirements of 40 CFR 75.62 (relating to monitoring plans), except that the monitoring plan shall also include all of the information required by 40 CFR Part 75, Subpart H.
(2) The Owner or Operator of a unit that is not subject to an acid rain emissions limitation shall comply with requirements of 40 CFR 75.62, except that the monitoring plan is only required to include the information required by 40 CFR Part 75, Subpart H.

SECTION C. Site Level Requirements

(i) §145.74(c) Certification applications:
The NOx authorized account representative shall submit an application to the Department within 45 days after completing all initial certification or recertification tests required under §145.71 (relating to initial certification and recertification procedures) including the information required under 40 CFR Part 75, Subpart H.

(j) §145.74 Source emission reporting requirements:
(1) The authorized account representative shall submit to the Department and to the NOx Budget Administrator a quarterly emissions report in accordance with the requirements of §145.74(d).
(2) The NOx authorized account representative shall submit to the Department and the NOx Budget Administrator a compliance certification in support of each quarterly report required under §145.74(d) based on reasonable inquiry of those persons with primary responsibility for ensuring that all of the units emissions are correctly and fully monitored.

(k) §145.30 Compliance certification report:
For each control period in which one or more NOx budget units at a source are subject to the NOx budget emissions limitation, the NOx authorized account representative of the source shall submit to the Department and the NOx Budget Administrator by November 30 of that year, a compliance certification report for the source covering all of the units.

(l) §145.90 Emission reduction credit provisions:
NOx budget units may create, transfer and use emission reduction credits (ERCs) in accordance with Chapter 127 and §145.90. ERCs may not be used to satisfy NOx allowance requirements.

 # 023 [25 Pa. Code §127.206]
ERC general requirements.

(a) Under the provisions of 25 Pa. Code Chapter 127, Subchapter E, New Source Review, the Owner or Operator shall secure Department-approved nitrogen oxides (NOx) Emission Reduction Credits (ERCs) in the amount of 529.2 tons per year prior to the commencement of operation of the combustion turbines. In accordance with §127.206(d)(1), the certified NOx ERCs shall be processed through the registry no later than the date approved by the Department for commencement of operation of the facility.

(b) The facility may not commence operation or increase emissions until the Department authorizes the transfer and use of the 529.2 tpy of NOx ERCs pursuant to 25 Pa. Code §127.208(2).

 # 024 [25 Pa. Code §127.512]
Operating permit terms and conditions.

[Additional authority for this permit condition is also derived from 25 Pa. Code §§129.96 - 129.100]

Compliance with existing Title V Operating Permit restrictions assures compliance with the applicable provisions of 25 Pa. Code §§ 129.96—129.100 (RACT II).

 # 025 [25 Pa. Code §127.512]
Operating permit terms and conditions.

The facility is subject to all applicable requirements of the Cross State Air Pollution Rule (CSAPR).

VIII. COMPLIANCE CERTIFICATION.

No additional compliance certifications exist except as provided in other sections of this permit including Section B (relating to Title V General Requirements).

IX. COMPLIANCE SCHEDULE.

No compliance milestones exist.

***** Permit Shield In Effect *****

SECTION D. Source Level Requirements

Source ID: 031 Source Name: UNIT 1 COMBUSTION TURBINE

Source Capacity/Throughput: 1,637.000 MMBTU/HR

Conditions for this source occur in the following groups: GROUP 1
GROUP 3

I. RESTRICTIONS.

No additional requirements exist except as provided in other sections of this permit including Section B (Title V General Requirements) and/or Section E (Source Group Restrictions).

II. TESTING REQUIREMENTS.

No additional testing requirements exist except as provided in other sections of this permit including Section B (Title V General Requirements) and/or Section E (Source Group Restrictions).

III. MONITORING REQUIREMENTS.

No additional monitoring requirements exist except as provided in other sections of this permit including Section B (Title V General Requirements) and/or Section E (Source Group Restrictions).

IV. RECORDKEEPING REQUIREMENTS.

No additional record keeping requirements exist except as provided in other sections of this permit including Section B (Title V General Requirements) and/or Section E (Source Group Restrictions).

V. REPORTING REQUIREMENTS.

No additional reporting requirements exist except as provided in other sections of this permit including Section B (Title V General Requirements) and/or Section E (Source Group Restrictions).

VI. WORK PRACTICE REQUIREMENTS.

No additional work practice requirements exist except as provided in other sections of this permit including Section B (Title V General Requirements) and/or Section E (Source Group Restrictions).

VII. ADDITIONAL REQUIREMENTS.

No additional requirements exist except as provided in other sections of this permit including Section B (Title V General Requirements) and/or Section E (Source Group Restrictions).

SECTION D. Source Level Requirements

***** Permit Shield in Effect. *****

SECTION D. Source Level Requirements

Source ID: 032 Source Name: UNIT 2 COMBUSTION TURBINE

Source Capacity/Throughput: 1,637.000 MMBTU/HR

Conditions for this source occur in the following groups: GROUP 1
GROUP 3

I. RESTRICTIONS.

No additional requirements exist except as provided in other sections of this permit including Section B (Title V General Requirements) and/or Section E (Source Group Restrictions).

II. TESTING REQUIREMENTS.

No additional testing requirements exist except as provided in other sections of this permit including Section B (Title V General Requirements) and/or Section E (Source Group Restrictions).

III. MONITORING REQUIREMENTS.

No additional monitoring requirements exist except as provided in other sections of this permit including Section B (Title V General Requirements) and/or Section E (Source Group Restrictions).

IV. RECORDKEEPING REQUIREMENTS.

No additional record keeping requirements exist except as provided in other sections of this permit including Section B (Title V General Requirements) and/or Section E (Source Group Restrictions).

V. REPORTING REQUIREMENTS.

No additional reporting requirements exist except as provided in other sections of this permit including Section B (Title V General Requirements) and/or Section E (Source Group Restrictions).

VI. WORK PRACTICE REQUIREMENTS.

No additional work practice requirements exist except as provided in other sections of this permit including Section B (Title V General Requirements) and/or Section E (Source Group Restrictions).

VII. ADDITIONAL REQUIREMENTS.

No additional requirements exist except as provided in other sections of this permit including Section B (Title V General Requirements) and/or Section E (Source Group Restrictions).

SECTION D. Source Level Requirements

***** Permit Shield in Effect. *****

SECTION D. Source Level Requirements

Source ID: 033 Source Name: UNIT 3 COMBUSTION TURBINE

Source Capacity/Throughput: 1,637.000 MMBTU/HR

Conditions for this source occur in the following groups: GROUP 1
GROUP 3

I. RESTRICTIONS.

No additional requirements exist except as provided in other sections of this permit including Section B (Title V General Requirements) and/or Section E (Source Group Restrictions).

II. TESTING REQUIREMENTS.

No additional testing requirements exist except as provided in other sections of this permit including Section B (Title V General Requirements) and/or Section E (Source Group Restrictions).

III. MONITORING REQUIREMENTS.

No additional monitoring requirements exist except as provided in other sections of this permit including Section B (Title V General Requirements) and/or Section E (Source Group Restrictions).

IV. RECORDKEEPING REQUIREMENTS.

No additional record keeping requirements exist except as provided in other sections of this permit including Section B (Title V General Requirements) and/or Section E (Source Group Restrictions).

V. REPORTING REQUIREMENTS.

No additional reporting requirements exist except as provided in other sections of this permit including Section B (Title V General Requirements) and/or Section E (Source Group Restrictions).

VI. WORK PRACTICE REQUIREMENTS.

No additional work practice requirements exist except as provided in other sections of this permit including Section B (Title V General Requirements) and/or Section E (Source Group Restrictions).

VII. ADDITIONAL REQUIREMENTS.

No additional requirements exist except as provided in other sections of this permit including Section B (Title V General Requirements) and/or Section E (Source Group Restrictions).

SECTION D. Source Level Requirements

***** Permit Shield in Effect. *****

SECTION D. Source Level Requirements

Source ID: 035 Source Name: UNIT 5 COMBUSTION TURBINE

Source Capacity/Throughput: 1,637.000 MMBTU/HR

Conditions for this source occur in the following groups: GROUP 1
GROUP 3

I. RESTRICTIONS.

No additional requirements exist except as provided in other sections of this permit including Section B (Title V General Requirements) and/or Section E (Source Group Restrictions).

II. TESTING REQUIREMENTS.

No additional testing requirements exist except as provided in other sections of this permit including Section B (Title V General Requirements) and/or Section E (Source Group Restrictions).

III. MONITORING REQUIREMENTS.

No additional monitoring requirements exist except as provided in other sections of this permit including Section B (Title V General Requirements) and/or Section E (Source Group Restrictions).

IV. RECORDKEEPING REQUIREMENTS.

No additional record keeping requirements exist except as provided in other sections of this permit including Section B (Title V General Requirements) and/or Section E (Source Group Restrictions).

V. REPORTING REQUIREMENTS.

No additional reporting requirements exist except as provided in other sections of this permit including Section B (Title V General Requirements) and/or Section E (Source Group Restrictions).

VI. WORK PRACTICE REQUIREMENTS.

No additional work practice requirements exist except as provided in other sections of this permit including Section B (Title V General Requirements) and/or Section E (Source Group Restrictions).

VII. ADDITIONAL REQUIREMENTS.

No additional requirements exist except as provided in other sections of this permit including Section B (Title V General Requirements) and/or Section E (Source Group Restrictions).

SECTION D. Source Level Requirements

***** Permit Shield in Effect. *****

SECTION D. Source Level Requirements

Source ID: 036 Source Name: UNIT 6 COMBUSTION TURBINE

Source Capacity/Throughput: 1,637.000 MMBTU/HR

Conditions for this source occur in the following groups: GROUP 1
GROUP 3

I. RESTRICTIONS.

No additional requirements exist except as provided in other sections of this permit including Section B (Title V General Requirements) and/or Section E (Source Group Restrictions).

II. TESTING REQUIREMENTS.

No additional testing requirements exist except as provided in other sections of this permit including Section B (Title V General Requirements) and/or Section E (Source Group Restrictions).

III. MONITORING REQUIREMENTS.

No additional monitoring requirements exist except as provided in other sections of this permit including Section B (Title V General Requirements) and/or Section E (Source Group Restrictions).

IV. RECORDKEEPING REQUIREMENTS.

No additional record keeping requirements exist except as provided in other sections of this permit including Section B (Title V General Requirements) and/or Section E (Source Group Restrictions).

V. REPORTING REQUIREMENTS.

No additional reporting requirements exist except as provided in other sections of this permit including Section B (Title V General Requirements) and/or Section E (Source Group Restrictions).

VI. WORK PRACTICE REQUIREMENTS.

No additional work practice requirements exist except as provided in other sections of this permit including Section B (Title V General Requirements) and/or Section E (Source Group Restrictions).

VII. ADDITIONAL REQUIREMENTS.

No additional requirements exist except as provided in other sections of this permit including Section B (Title V General Requirements) and/or Section E (Source Group Restrictions).

SECTION D. Source Level Requirements

***** Permit Shield in Effect. *****

SECTION D. Source Level Requirements

Source ID: 037 Source Name: UNIT 7 COMBUSTION TURBINE

Source Capacity/Throughput: 1,637.000 MMBTU/HR

Conditions for this source occur in the following groups: GROUP 1
GROUP 3

I. RESTRICTIONS.

No additional requirements exist except as provided in other sections of this permit including Section B (Title V General Requirements) and/or Section E (Source Group Restrictions).

II. TESTING REQUIREMENTS.

No additional testing requirements exist except as provided in other sections of this permit including Section B (Title V General Requirements) and/or Section E (Source Group Restrictions).

III. MONITORING REQUIREMENTS.

No additional monitoring requirements exist except as provided in other sections of this permit including Section B (Title V General Requirements) and/or Section E (Source Group Restrictions).

IV. RECORDKEEPING REQUIREMENTS.

No additional record keeping requirements exist except as provided in other sections of this permit including Section B (Title V General Requirements) and/or Section E (Source Group Restrictions).

V. REPORTING REQUIREMENTS.

No additional reporting requirements exist except as provided in other sections of this permit including Section B (Title V General Requirements) and/or Section E (Source Group Restrictions).

VI. WORK PRACTICE REQUIREMENTS.

No additional work practice requirements exist except as provided in other sections of this permit including Section B (Title V General Requirements) and/or Section E (Source Group Restrictions).

VII. ADDITIONAL REQUIREMENTS.

No additional requirements exist except as provided in other sections of this permit including Section B (Title V General Requirements) and/or Section E (Source Group Restrictions).

SECTION D. Source Level Requirements

***** Permit Shield in Effect. *****

SECTION D. Source Level Requirements

Source ID: 040 Source Name: BLOCK 1 COOLING TOWER

Source Capacity/Throughput:

Conditions for this source occur in the following groups: GROUP 2

PROC 040 → STAC S21

I. RESTRICTIONS.

No additional requirements exist except as provided in other sections of this permit including Section B (Title V General Requirements) and/or Section E (Source Group Restrictions).

II. TESTING REQUIREMENTS.

No additional testing requirements exist except as provided in other sections of this permit including Section B (Title V General Requirements) and/or Section E (Source Group Restrictions).

III. MONITORING REQUIREMENTS.

No additional monitoring requirements exist except as provided in other sections of this permit including Section B (Title V General Requirements) and/or Section E (Source Group Restrictions).

IV. RECORDKEEPING REQUIREMENTS.

No additional record keeping requirements exist except as provided in other sections of this permit including Section B (Title V General Requirements) and/or Section E (Source Group Restrictions).

V. REPORTING REQUIREMENTS.

No additional reporting requirements exist except as provided in other sections of this permit including Section B (Title V General Requirements) and/or Section E (Source Group Restrictions).

VI. WORK PRACTICE REQUIREMENTS.

No additional work practice requirements exist except as provided in other sections of this permit including Section B (Title V General Requirements) and/or Section E (Source Group Restrictions).

VII. ADDITIONAL REQUIREMENTS.

No additional requirements exist except as provided in other sections of this permit including Section B (Title V General Requirements) and/or Section E (Source Group Restrictions).

***** Permit Shield in Effect. *****

SECTION D. Source Level Requirements

Source ID: 080 Source Name: BLOCK 2 COOLING TOWER

Source Capacity/Throughput:

Conditions for this source occur in the following groups: GROUP 2

PROC 080 → STAC S22

I. RESTRICTIONS.

No additional requirements exist except as provided in other sections of this permit including Section B (Title V General Requirements) and/or Section E (Source Group Restrictions).

II. TESTING REQUIREMENTS.

No additional testing requirements exist except as provided in other sections of this permit including Section B (Title V General Requirements) and/or Section E (Source Group Restrictions).

III. MONITORING REQUIREMENTS.

No additional monitoring requirements exist except as provided in other sections of this permit including Section B (Title V General Requirements) and/or Section E (Source Group Restrictions).

IV. RECORDKEEPING REQUIREMENTS.

No additional record keeping requirements exist except as provided in other sections of this permit including Section B (Title V General Requirements) and/or Section E (Source Group Restrictions).

V. REPORTING REQUIREMENTS.

No additional reporting requirements exist except as provided in other sections of this permit including Section B (Title V General Requirements) and/or Section E (Source Group Restrictions).

VI. WORK PRACTICE REQUIREMENTS.

No additional work practice requirements exist except as provided in other sections of this permit including Section B (Title V General Requirements) and/or Section E (Source Group Restrictions).

VII. ADDITIONAL REQUIREMENTS.

No additional requirements exist except as provided in other sections of this permit including Section B (Title V General Requirements) and/or Section E (Source Group Restrictions).

***** Permit Shield in Effect. *****

SECTION D. Source Level Requirements

Source ID: 101 Source Name: TWO (2) DISTILLATE FUEL STORAGE TANKS

Source Capacity/Throughput:

PROC 101 → STAC Z01

I. RESTRICTIONS.

Emission Restriction(s).

 # 001 [25 Pa. Code §127.441]

Operating permit terms and conditions.

Pursuant to the Best Available Technology (BAT) provisions of 25 Pa. Code §127.1, the Owner or Operator shall limit the VOC emissions from the fuel storage tanks to 0.6 tons per year in a 12-month rolling period.

II. TESTING REQUIREMENTS.

No additional testing requirements exist except as provided in other sections of this permit including Section B (Title V General Requirements).

III. MONITORING REQUIREMENTS.

No additional monitoring requirements exist except as provided in other sections of this permit including Section B (Title V General Requirements).

IV. RECORDKEEPING REQUIREMENTS.

No additional record keeping requirements exist except as provided in other sections of this permit including Section B (Title V General Requirements).

V. REPORTING REQUIREMENTS.

No additional reporting requirements exist except as provided in other sections of this permit including Section B (Title V General Requirements).

VI. WORK PRACTICE REQUIREMENTS.

No additional work practice requirements exist except as provided in other sections of this permit including Section B (Title V General Requirements).

VII. ADDITIONAL REQUIREMENTS.

No additional requirements exist except as provided in other sections of this permit including Section B (Title V General Requirements).

***** Permit Shield in Effect. *****

SECTION D. Source Level Requirements

Source ID: 200 Source Name: EMERGENCY CAT GENERATOR (GP9)

Source Capacity/Throughput:

I. RESTRICTIONS.

Emission Restriction(s).

 # 001 [25 Pa. Code §127.512]

Operating permit terms and conditions.

Any diesel engine for which construction commenced on or after July 1, 1972 and best available technology requirements have not been previously established:

i. If the diesel-fired internal combustion engine has an engine rating greater than 100 brake horsepower, the engine shall, at a minimum, comply with a Total Hydrocarbon (THC) emission standard of 1.0 gm/bhp-hr.

ii. If the diesel-fired internal combustion engine is equal to or greater than 200 brake horsepower and number of hours of operation of engine are equal to or greater than 500 hours for an engine rating (BHP) greater than 2000, then the engine shall be installed with NOx control device with a minimum of 80% NOx control efficiency.
If NOx emissions from engine(s) are controlled using control technology that uses ammonia or urea as a reagent, then the company shall limit the exhaust ammonia slip at 10 ppmvd, or less corrected at 15% O2.
All other diesel engines shall at a minimum comply with the NOx emission standard of 6.9 gms/hp-hr.

iii. If the diesel-fired engine is equal to or greater than 100 brake horsepower and number of hours of operation of engine are equal to or greater than 100 hours for an engine rating (BHP) greater than 2500, then the engine shall be installed with CO Oxidation Catalyst control device with a minimum of 90% control efficiency.
All other diesel engines shall at a minimum comply with CO emission standard of 2.0 gms/bhp-hr.

iv. The sulfur content in diesel fuel shall not, at any time exceed 0.3 percent (by weight).

v. The particulate matter emissions from each engine shall not exceed 0.4 gms/bhp-hr.

vi. Visible emissions from diesel engine(s) stacks shall not exceed the following limitations:
A. Equal to or greater than 10% for a period or periods aggregating more than three (3) minutes in any one (1) hour; and
B. Equal to or greater than 30% at any time.

vii. Odor emissions in such a manner that the malodors are detectable outside the property of the permittee as specified in 25 Pa. Code §123.31.

 # 002 [25 Pa. Code §127.512]

Operating permit terms and conditions.

The emission limitations shall apply at all times except during periods of start-up and shut-down, provided, however, that the duration of start-up and shut-down do not exceed one hour per occurrence.

 # 003 [25 Pa. Code §127.512]

Operating permit terms and conditions.

a. For a new internal combustion engine installed and which has a rated capacity greater than 500 brake horsepower, within 180 days of receiving authority to construct under this general permit, the permittee shall perform stack testing in accordance with 25 Pa. Code Chapter 139.

b. In addition to the stack testing required by this condition, within 12 months after the initial stack testing, and annually thereafter, the permittee shall perform NOx emissions tests upon each of the respective engines subjected to the BAT as

SECTION D. Source Level Requirements

stated herein using a portable analyzer approved by the Department. The Department may alter the frequency of annual portable analyzer tests based on the results. The Department may also waive all or parts of this requirement if the permittee demonstrates compliance, in lieu of testing, through alternate means satisfactory to the Department.

c. The Department reserves the right to require stack tests in accordance with EPA reference methods should the data from the portable analyzer warrant such tests. The purpose of this testing is to demonstrate compliance with the emission limitations required for new engines.

d. The Department may accept the vendor guarantees or recent on-site test data on similar engines, or any other means approved by the Department as a verification of NOx emission if the NOx emissions from a diesel engine are less 10 tons per year if a diesel engine is located in areas other than severe non-attainment for ozone.

e. If performance stack tests are required for the demonstration of compliance with applicable emissions limits, the owner or operator of the affected facility shall comply with the following requirements:
i. Within sixty (60) days after achieving the maximum production rate at which the affected facility will be operated, but no later than one hundred eighty (180) days after the initial startup of the source and the owner or operator shall demonstrate compliance with the applicable emission limits.
ii. At least sixty (60) days prior to the test, the company shall submit to the Department for approval the procedures for the test and a sketch with dimensions indicating the location of sampling ports and other data to ensure the collection of representative samples.
iii. At least thirty (30) days prior to the test, the Department shall be informed of the date and time of the test.
iv. Within sixty (60) days after the source test(s), two copies of the complete test report, including all operating conditions, shall be submitted to the Department.

II. TESTING REQUIREMENTS.

No additional testing requirements exist except as provided in other sections of this permit including Section B (Title V General Requirements).

III. MONITORING REQUIREMENTS.

No additional monitoring requirements exist except as provided in other sections of this permit including Section B (Title V General Requirements).

IV. RECORDKEEPING REQUIREMENTS.

 # 004 [25 Pa. Code §127.512]
Operating permit terms and conditions.

a. The permittee shall maintain accurate records, which, at a minimum, shall include:
i. The number of hours per calendar year that each engine or piece of equipment operated using non-resettable hour meter.
ii. The amount of fuel used per calendar year in each engine or piece of equipment.

b. When a new diesel-fired internal combustion engine is installed and is required to conduct a performance test, the permittee shall maintain records or report the following:
i. Records including a description of testing methods, results, all engine operating data collected during the tests and a copy of the calculations performed to determine compliance with emission standards.
ii. Copies of the report that demonstrates that the engines were operating at rated brake horsepower and rated speed conditions during performance testing.
iii. Submittal of reports in accordance with the requirements and schedules outlined in this operating permit.

c. These records shall be retained for a minimum of five (5) years and shall be made available to the Department upon request. The Department reserves the right to expand the list contained in this condition as it may reasonably prescribe pursuant to the provisions of Section 4 of the Pennsylvania Air Pollution Control Act (35 P. S. §§4004), and as it may deem

SECTION D. Source Level Requirements

necessary to determine compliance with any condition contained herein.

V. REPORTING REQUIREMENTS.

No additional reporting requirements exist except as provided in other sections of this permit including Section B (Title V General Requirements).

VI. WORK PRACTICE REQUIREMENTS.

 # 005 [25 Pa. Code §127.512]

Operating permit terms and conditions.

Each diesel engine rated equal to or greater than 3,000 brake horsepower that emits greater or equal to 153 tons of NOx from May 1 through September 30 of any year shall comply with the applicable requirements as established in 25 Pa. Code §§145.11 through 145.115.

 # 006 [25 Pa. Code §127.512]

Operating permit terms and conditions.

The diesel-fired internal combustion engine(s) shall be:

a. operated in such a manner as not to cause air pollution, as defined in 25 Pa. Code §121.1;

b. operated and maintained in a manner consistent with good operating and maintenance practices; and

c. operated and maintained in accordance with the manufacturer's specifications and the applicable terms and conditions of this operating permit.

VII. ADDITIONAL REQUIREMENTS.

 # 007 [25 Pa. Code §127.512]

Operating permit terms and conditions.

This engine is subject to 40 CFR Part 60 Subpart IIII and shall comply will all applicable conditions in §60.4200 through §60.4219.

***** Permit Shield in Effect. *****

SECTION E. Source Group Restrictions.

Group Name: GROUP 1

Group Description: Combustion Turbines

Sources included in this group

ID	Name
031	UNIT 1 COMBUSTION TURBINE
032	UNIT 2 COMBUSTION TURBINE
033	UNIT 3 COMBUSTION TURBINE
035	UNIT 5 COMBUSTION TURBINE
036	UNIT 6 COMBUSTION TURBINE
037	UNIT 7 COMBUSTION TURBINE
C01	SELECTIVE CATALYTIC REDUCTION
C02	SELECTIVE CATALYTIC REDUCTION
C03	SELECTIVE CATALYTIC REDUCTION
C05	SELECTIVE CATALYTIC REDUCTION
C06	SELECTIVE CATALYTIC REDUCTION
C07	SELECTIVE CATALYTIC REDUCTION

I. RESTRICTIONS.

Emission Restriction(s).

 # 001 [25 Pa. Code §127.512]

Operating permit terms and conditions.

Pursuant to the Best Available Technology (BAT) provisions of 25 Pa. Code §127.1, the Owner or Operator shall limit the emission of ammonia for each selective catalytic reduction (SCR) system exhaust to 10 ppmvd (one-hour block average), measured dry volume corrected to 15% oxygen. The Department reserves the right to impose a more stringent limit based on the test results.

 # 002 [25 Pa. Code §127.512]

Operating permit terms and conditions.

Pursuant to the provisions of 25 Pa. Code §§127.1, 127.12(b) and 127.25 the visible air contaminants from each combustion turbine exhaust stack shall not be emitted in such a manner that the opacity of the emission is equal to or greater than 10% for a period or periods aggregating more than 3 minutes in any one hour or equal to or greater than 30% at any time.

 # 003 [25 Pa. Code §127.512]

Operating permit terms and conditions.

HAP emissions from the combustion turbines shall be less than 10 tons for any single HAP and 25 tons aggregate for any combination of HAPs during any consecutive 12-month rolling period.

 # 004 [25 Pa. Code §127.512]

Operating permit terms and conditions.

Sulfur Dioxide (SO2) emissions from the combustion turbines operating in either simple or combined cycle modes shall not exceed:

(a) 0.003 pounds per million BTU (HHV) on an hourly basis when firing natural gas; and,
(b) 0.051 pounds per million BTU (HHV) on an hourly basis when firing liquid fuel.

 # 005 [25 Pa. Code §127.512]

Operating permit terms and conditions.

PM/PM10 emissions from the combustion turbines shall not exceed:

(a) 0.0135 pounds per million BTU (HHV) on an hourly basis when firing natural gas for the simple cycle mode of operation;
(b) 0.0184 pounds per million BTU (HHV) on an hourly basis when firing liquid fuel for the simple cycle mode of operation;
(c) 0.0141 pounds per million BTU (HHV) on an hourly basis when firing natural gas for the combined cycle mode of

SECTION E. Source Group Restrictions.

operation; and,
(d) 0.0288 pounds per million BTU (HHV) on an hourly basis when firing liquid fuel for the combined cycle mode of operation.

 # 006 [25 Pa. Code §127.512]

Operating permit terms and conditions.

Sulfuric Acid (H2SO4) mist emissions from the combustion turbines shall not exceed:

(a) 0.00046 pounds per million BTU (HHV) on an hourly basis when firing natural gas for the simple cycle mode of operation;
(b) 0.00390 pounds per million BTU (HHV) on an hourly basis when firing liquid fuel for the simple cycle mode of operation;
(c) 0.00046 pounds per million BTU (HHV) on an hourly basis when firing natural gas for the combined cycle mode of operation; and,
(d) 0.00780 pounds per million BTU (HHV) on an hourly basis when firing liquid fuel for the combined cycle mode of operation.

 # 007 [25 Pa. Code §127.512]

Operating permit terms and conditions.

The Owner or Operator shall limit the NOx emissions (corrected to 15% O2) from each combustion turbine to the following:

1 hour NOx averages calculated from a 3-hour rolling block average

Mode At 15% Oxygen	Natural Gas Pre-mix burner operation up to & including base load	Peak Load*	Natural Gas or Liquid Fuel Diffusion mode operation up to & including peak load*
Simple Cycle	9 ppmvd	25 ppmvd	42 ppmvd
Combined Cycle	2.5 ppmvd	5 ppmvd	8 ppmvd

*Peak Operation is defined as any operating mode that requires a higher firing temperature than that required to achieve Base Operation ratings. The modes are uniquely defined (as described by Section H of this permit) by the unit control configuration and will be recorded by the Owner or Operator.

 # 008 [25 Pa. Code §127.512]

Operating permit terms and conditions.

(a) The Nitrogen Oxide (NOx), Carbon Monoxide (CO) and Volatile Organic Coumpound (VOC)emission levels in the Operating Permit apply at all times except during periods of start-up and shutdown, defined as follows:

(1) Start-Up: Commences with the initiation of fuel injection into the combustion chambers and ends at the times specified below.
(2) Cold Start-up: Refers to Start-ups made more than 24 hours after shutdown. When operating in the simple cycle mode, a cold start-up shall not exceed 20 minutes. When operating in the combined cycle mode, a cold start-up shall not exceed 60 minutes.
(3) Hot Start-up: Refers to Start-ups made less than 24 hours after shutdown, and to mode changes and fuel switches. For mode changes and fuel switches, a hot start-up begins at the time the combustion turbine load falls below 75% base load. When operating in the simple cycle mode, a hot start-up shall not exceed 20 minutes. When operating in the combined cycle mode, a hot start-up shall not exceed 30 minutes.
(4) Shutdown: Commences when the combustion turbine load falls below 75% base load and ends when the fuel injection into the combustion chambers is terminated. Shutdown periods shall not exceed 20 minutes per event.
(5) NOX, CO and VOC emission levels in the Operating Permit apply at all times except periods of mode changes. Unplanned /unanticpated mode change events are caused by: rapid change exhaust temperature, humming, low incoming natural gas pressure, low differential pressure in the combustion chamber, pilot gas position less than 20%, pilot gas valve upset, calculated outlet temperature below minimum causing automatic mode change, transmission/substation upsets/restrictions, load rejection, rapid change in MW output, emergency stop valve upsets, (note that each of these events can trigger an automatic mode switch to protect the gas turbine usually pre-mix to diffusion). Operator induced mode

SECTION E. Source Group Restrictions.

change events are caused by: calculated outlet temperature below minimum thus requiring mode change, electric reliability emergency or load demand increase directed by PJM or local system operator to switch modes, PJM maximum capacity testing, operator selecting fuel oil from natural gas operations or diffusion mode operation directly from pre-mix operations. When a system emergency does not allow for mode changes loads under Condition (3) then Condition #5 will apply. CEMS exempt codes for Condition (3) will be the same exempt codes for Condition (5).

(b) Pursuant to the Lowest Achievable Emission Rate (LAER) provisions of 25 Pa. Code §127.205, the Owner or Operator shall limit the NOx emissions (corrected to 15% O2) from each combustion turbine to the following:

Startup Limits of emissions:

	Simple Cycle Limits, lb/start		Combined Cycle Limits, lb/start	
	Cold Start (20 Min)	Hot Start (20 Min)	Cold Start (60 Min)	Hot Start (30 Min)
NOx-Natural Gas	44	44	151	71
NOx-LSLPP	126	126	310	172
CO-Natural Gas	62	62	78	66
CO-LSLPP	264	264	280	268
VOC-Natural Gas	13	13	15	14
VOC-LSLPP	53	53	55	54

Shutdown Limits- 20 minutes in duration

Fuel	Natural Gas	LSLPP
NOx Emissions, lb/shutdown	44	126
CO Emissions, lb/shutdown	62	264
VOC Emissions, lb/shutdown	13	53

 # 009 [25 Pa. Code §127.512]

Operating permit terms and conditions.

Carbon monoxide (CO) emissions from the combustion turbines when firing natural gas or liquid fuel shall not exceed 6.0 ppmvd @ 15% oxygen on an hourly basis [3 hour rolling block average] when operating in either simple cycle or combined cycle modes.

 # 010 [25 Pa. Code §127.512]

Operating permit terms and conditions.

Volatile organic compound (VOC) emissions (corrected to 15% oxygen) from the combustion turbines shall not exceed:

(a) 1.2 ppmvd on an hourly basis when operating in either simple or combined cycle operation while firing natural gas in the premix configuration; and,

(b) 1.3 ppmvd on an hourly basis when operating in either simple or combined cycle operation while firing either natural gas in the diffusion configuration or while burning liquid fuel.

Fuel Restriction(s).

 # 011 [25 Pa. Code §127.512]

Operating permit terms and conditions.

Pursuant to the Best Available Technology (BAT) provisions of 25 Pa. Code §127.1, the six (6) combustion turbines shall primarily fire natural gas with capability for low sulfur distillate fuel oil (liquid fuel) with sulfur content no greater than 0.05% by weight.

 # 012 [25 Pa. Code §127.512]

Operating permit terms and conditions.

Gas unavailability shall be defined as those periods of time when:

(a) Physical damage, maintenance to pipelines or ancillary equipment prevents the delivery of gas to the turbines;
(b) Equipment failure, maintenance or malfunction occurs such that gas pressures, temperatures or fuel quality are not

SECTION E. Source Group Restrictions.

adequate for turbine operation;
(c) Unavailability due to physical limitation of supply at times of high pipeline demand, including insufficient pressures or flows; or,
(d) Electric Reliability Emergencies issued by the PJM Independent System Operator and supply of natural gas is inadequate.

Operation Hours Restriction(s).

 # 013 [25 Pa. Code §127.512]

Operating permit terms and conditions.

(a) With respect to the operating period specified in Condition #016, the Owner or Operator may operate the combustion turbines in Diffusion mode during the NOx Budget Rule "Control Period" (as defined in 25 Pa. Code §145.2) only when needed electric power output (MW) is not achievable through Pre-mix mode of operation AND either one of the following conditions is met:

(1) a Maximum Emergency Generation Action has been issued by the PJM Independent System Operator,
(2) a Maximum Emergency Generation Alert has been issued by the PJM along with a Request to Purchase Emergency Power,
(3) a local power emergency has occurred or is imminent, or,
(4) the PJM has directed the loading of a simple cycle combustion turbine that emits at a higher NOx emissions rate than this facility operating in the diffusion mode.

(b) Paragraph (a)(4) is authorized through the facility's initial Title V operating permit. It will be reviewed and evaluated for inclusion, modification or removal during the Department's renewal process for the facility's Title V air operating permit. The Owner or Operator shall maintain appropriate PJM notification and operating logs and records for a minimum of five years in order to verify compliance with the above Condition.

(c) Within the 200 hours specified in Condition #015, the Owner or Operator may also operate in diffusion mode for emissions compliance testing, and/or PJM required capacity testing. The Owner or Operator may perform any diffusion mode stack emissions compliance testing outside of the NOx Budget Rule "Control Period." Should the Department require the Owner or Operator to perform diffusion mode emissions testing during this time period, any emissions testing hours will not be counted toward consumption of the 200 hour allotment.

(d) For the local power emergency, the Department shall be notified by telephone within 24 hours (or the next business day whichever is greater) and a written description of the emergency shall be submitted to the Department within seven (7) business days.

(e) This requirement does not apply during start-up, shut down or during periods of operational upset when the unit automatically defaults to diffusion operation as indicated by the loss of the premix release signal. Any diffusion mode operation occurring during during start-up, shut down or during periods of operational upset will be counted toward the consumption of the allotments as allowed under Condition # 015.

 # 014 [25 Pa. Code §127.512]

Operating permit terms and conditions.

The turbines shall operate no more than 43,800 hours/year (based on a 12 month rolling sum).

 # 015 [25 Pa. Code §127.512]

Operating permit terms and conditions.

(a) Pursuant to the Lowest Achievable Emission Rate (LAER) provisions of 25 Pa Code §127.205, in addition to firing the unit in the premix, base load mode of gas-fired operation, the Owner or Operator is authorized to operate each of the six combustion turbines in other modes of gas-fired operation including but not greater than 100 hours per year in premix peak mode and 400 hours per year in gas-fired diffusion mode on a 12-month rolling basis. These hours of operation may be totaled for all installed and operational units, up to six units, on a facility-wide basis (i.e. 600 hours in gas premix peak and 2400 hours in gas diffusion).

(b) The Owner or Operator shall not operate in diffusion mode (natural gas or oil) each of the six combustion turbines more than 200 hours during each NOx Budget Rule "Control Period" (as defined in 25 Pa. Code §145.2). These hours of

SECTION E. Source Group Restrictions.

operation may be totaled for all installed and operational units, up to six units, on a facility-wide basis (i.e. 1200 hours in diffusion gas and oil).

 # 016 [25 Pa. Code §127.512]

Operating permit terms and conditions.

The six (6) combustion turbines at the site shall not operate more than a combined total of 108 unit operating hours on a daily (24 hour calendar day) basis while firing liquid fuel, in the combined cycle mode of operation. The units may operate on natural gas for the remaining 36 unit operating hours. Operation in simple cycle mode, while burning liquid fuel, shall not be limited on a daily basis.

Throughput Restriction(s).

 # 017 [25 Pa. Code §127.512]

Operating permit terms and conditions.

The total fuel consumption of liquid fuel in the six (6) combustion turbines shall not exceed a total of 61,038,000 gallons during any consecutive rolling 12-month period.

II. TESTING REQUIREMENTS.

 # 018 [25 Pa. Code §127.512]

Operating permit terms and conditions.

(a) Once each permit term the Owner or Operator shall demonstrate compliance with each emission limit as per 40 CFR §60.8, 40 CFR Part 60 Subpart KKKK, and Chapter 139 of the Rules and Regulations of the Department of Environmental Protection. The Department will extend the 60/180 day time period noted above for diffusion mode testing in order to perform such testing outside of the NOx Budget Rule "Control Period". The Department will determine the subsequent testing frequency following the initial compliance determination, based upon emissions and equipment performance over a representative and adequate time period, and reserves the right to revise and make more stringent the emissions standards based on actual stack test results and/or CEM data.

(b) During a permit term, compliance testing while firing fuel oil is not required if fuel oil is not fired during the permit term. If fuel oil is fired during a permit term the compliance testing is required within 180 days of the oil firing but before the end of the permit term. (180 days should provide enough time to obtain an approved protocol, schedule the testing with PJM and system operator and schedule the stack testing firm, and PaDEP oversight).

 # 019 [25 Pa. Code §127.512]

Operating permit terms and conditions.

The permittee shall comply with all applicable Performance Testing requirements specified in 40 CFR Part 60 Subpart KKKK 60.4400 through 60.4415.

III. MONITORING REQUIREMENTS.

 # 020 [25 Pa. Code §127.511]

Monitoring and related recordkeeping and reporting requirements.

(a) Continuous emission monitoring system for nitrogen oxides (as NOx), carbon monoxide (CO), diluent gas (O2 or CO2), and ammonia must be approved by the Department and installed, operated and maintained in accordance with the requirements of Chapter 139 of the Rules and Regulations of the Department of Environmental Protection. Exhaust gas flow rate at all points where gas contaminants are measured shall be monitored by 40 CFR 60 Appendix A Method 19.

(b) As an alternative to operating a CEM for direct measurement of ammonia slip, the Owner or Operator may substitute an "alternative" monitoring system that will assure compliance with Section C, Condition #005, if approved by the Department. This alternative monitoring plan must be submitted for approval in conjunction with those for the CEM system.

 # 021 [25 Pa. Code §127.511]

Monitoring and related recordkeeping and reporting requirements.

(a) The Owner or Operator shall monitor the sulfur and nitrogen content of the fuel being fired in the combustion turbines as per 40 CFR §60.334(h). The frequency of monitoring the sulfur and nitrogen content as applicable shall be in accordance with 40 CFR §60.334(i). In addition, the Owner or Operator shall monitor water to fuel ratios as required under 40 CFR

SECTION E. Source Group Restrictions.

§60.334(b).

(b) The Owner or Operator shall install and maintain fuel flow monitors that meet the requirements of 40 CFR Part 75.

 # 022 [25 Pa. Code §127.512]

Operating permit terms and conditions.

The permittee shall comply with all applicable Monitoring requirements specified in 40 CFR Part 60 Subpart KKKK 60.4335 through 60.4370.

IV. RECORDKEEPING REQUIREMENTS.

 # 023 [25 Pa. Code §127.511]

Monitoring and related recordkeeping and reporting requirements.

Records required under this operating permit, 40 CFR Part 60 Subpart KKKK and 40 CFR Parts 72 and 75 shall be kept for a period of 5 years and shall be made available to the Department upon request.

(a) The Owner or Operator shall maintain records on all air pollution control system performance evaluations and records of calibration checks, adjustments and maintenance performed on all equipment which is subject to this operating permit.

(b) The Owner or Operator shall maintain a copy of the manufacturer's recommendation for the six combustion turbines, two cooling towers, and air pollution control equipment on-site.

(c) The Owner or Operator shall maintain a copy of the manufacturer's recommendations for all CEMs that are required by this operating permit.

(d) The Owner or Operator shall keep a record of the date of malfunction, the time of the malfunction, the cause of the malfunction, and the action taken to correct the malfunction.

(e) The Owner or Operator shall keep a record monitoring or testing associated with any cooling tower sampling for calculation of particulate emissions from this source.

 # 024 [25 Pa. Code §127.511]

Monitoring and related recordkeeping and reporting requirements.

(a) The Owner or Operator shall, at a minimum, record the following:

(1) Monthly fuel consumption rate and 12-month rolling total fuel consumption for each combustion turbine.
(2) Hours of start-up and shutdown period for each turbine.
(3) Monthly hours of operation for each turbine in Peak Mode.
(4) Monthly emissions of TSP/PM10, SO2, NOx, CO, H2SO4 and VOC.
(5) 12-month rolling total of the emissions identified in Section C, Condition #005.
(6) Results of fuel sampling.

(b) The Owner or Operator shall record each start-up and shutdown, including the date and time of each event, for the combustion turbines.

 # 025 [25 Pa. Code §127.512]

Operating permit terms and conditions.

The permittee shall comply with the recordkeeping requirements established in 25 Pa. Code Chapter 139, Subchapter C (relating to requirements for source monitoring for stationary sources), (and) the “Record Keeping and Reporting” requirements in the Department’s Continuous Source Monitoring Manual, Revision No. 8, 274-0300-001.

Records shall be retained for at least 5 years and shall be made available to the Department upon request. Compliance with any subsequently issued revision to the Continuous Source Monitoring Manual will constitute compliance with this permit condition.

SECTION E. Source Group Restrictions.

V. REPORTING REQUIREMENTS.

 # 026 [25 Pa. Code §127.511]

Monitoring and related recordkeeping and reporting requirements.

(a) At least 60 days prior to any test, the Owner or Operator shall submit to the Department for approval the procedures for a test and a sketch with dimensions indicating the location of sampling ports and other data to ensure the collection of representative samples.

(b) At least 30 days prior to any test, the Regional Air Quality Program Manager shall be informed of the date and time of the test.

(c) Within 60 days after the source test(s), two copies of the complete test report, including all operating conditions, shall be submitted to the Regional Air Quality Program Manager for approval.

 # 027 [25 Pa. Code §127.511]

Monitoring and related recordkeeping and reporting requirements.

These sources are subject to 40 CFR Part 60, Subpart KKKK requirements of the Standards of Performance for New Stationary Sources. In accordance with the requirements of 40 CFR §60.4, the Owner or Operator shall submit copies of all requests, reports (written or electronic), applications, submittals and other communications to both EPA and the Department. The EPA copies shall be forwarded to:

Enforcement & Compliance Assurance Division
Air, RCRA and Toxics Branch (3ED21)
Four Penn Center
1600 John F. Kennedy Boulevard
Philadelphia, PA 19103-2852

The Title V compliance certification shall be emailed to EPA at R3_APD_Permits@epa.gov.

and

Mark J Wejkszner
Air Quality Program Manager
Department of Environmental Protection
2 Public Square
Wilkes-Barre, Pa 18701-1915

 # 028 [25 Pa. Code §127.512]

Operating permit terms and conditions.

The permittee shall submit quarterly reports of continuous emission monitoring to the Department in accordance with the requirements established in 25 Pa. Code Chapter 139, Subchapter C (relating to requirements for source monitoring for stationary sources, (and) the “Record Keeping and Reporting” requirements as established in the Department’s Continuous Source Monitoring Manual, Revision No. 8, 274-0300-001.

The permittee shall report emissions for all periods of unit operation, including startup, shutdown and malfunction. Initial quarterly reports following system certification shall be submitted to the Department within 35 days following the date upon which the Department notifies the owner or operator, in writing, of the approval of the continuous source monitoring system for use in determining compliance with applicable emission standards. Subsequent quarterly reports shall be submitted to the Department within 30 days after the end of each calendar quarter. Failure to submit required reports of continuous emission monitoring within the time periods specified in this Condition, shall constitute violations of this Permit, unless approved in advance by the Department in writing. Compliance with any subsequently issued revision to the Continuous Source Monitoring Manual will constitute compliance with this permit condition.

 # 029 [25 Pa. Code §127.512]

Operating permit terms and conditions.

The permittee shall comply with all applicable Reporting requirements specified in 40 CFR Part 60 Subpart KKKK 60.4375 through 60.4395.

SECTION E. Source Group Restrictions.

VI. WORK PRACTICE REQUIREMENTS.

No additional work practice requirements exist except as provided in other sections of this permit including Section B (Title V General Requirements).

VII. ADDITIONAL REQUIREMENTS.

 # 030 [25 Pa. Code §127.512]

Operating permit terms and conditions.

The Department reserves the right to use the CEM data, stack test results, and the operating parameters determined during optimization of the turbines and their associated air cleaning devices to verify emission rates, to establish emission factors, and to develop compliance assurance measures in the Operating Permit.

 # 031 [25 Pa. Code §127.512]

Operating permit terms and conditions.

Continuous Emission Monitoring Systems and components must be operated and maintained in accordance with the requirements established in 25 Pa. Code Chapter 139, Subchapter C (relating to requirements for source monitoring for stationary sources) and the "Quality Assurance" requirements in the Department's Continuous Source Monitoring Manual, Revision No. 8, 274-0300-001.

Compliance with any subsequently issued revision to the Continuous Source Monitoring Manual will constitute compliance with this permit condition.

 # 032 [25 Pa. Code §127.512]

Operating permit terms and conditions.

a. The permittee shall perform the emissions monitoring analysis procedures or test methods required under an applicable requirement including procedures and methods under Sections 114(a)(3) (42 U.S.C.A.§§ 7414 (a)(3)) or 504(b) (42 U.S.C.A.§§ 7661c(b)) of the Clean Air Act.

b. Unless otherwise required by this permit, the permittee shall comply with applicable monitoring, quality assurance, recordkeeping and reporting requirements of the Air Pollution Control Act, 25 Pa. Code, Subpart C, Article III (relating to air resources), including Chapter 139 (relating to sampling and testing). The permittee shall also comply with applicable requirements related to monitoring, quality assurance, reporting and recordkeeping required by the Clean Air Act including applicable monitoring requirements including §§ 114(a)(3) and 504(b) and regulations adopted thereunder, unless otherwise required by this permit.

 # 033 [25 Pa. Code §127.512]

Operating permit terms and conditions.

The permittee shall comply with all applicable General Compliance requirements specified in 40 CFR Part 60 Subpart KKKK 60.4333.

 # 034 [40 CFR Part 72 Regulations on Permits §40 CFR 72.1]

Subpart A--Acid Rain Program General Provisions

Purpose and scope.

(a) The six (6) combustion turbines are subject to the federal Acid Rain Program requirements specified in Title IV of the Clean Air Act Amendments of 1990 and shall comply with all applicable provisions of Title IV and implementing regulations including:

40 CFR Part 72 Permits Regulation
40 CFR Part 73 Sulfur Dioxide Allowance System
40 CFR Part 75 Continuous Emissions Monitoring
40 CFR Part 77 Excess Emissions

(b) Upon start-up, the facility is subject to the applicable requirements in 40 CFR Parts 72 through 78. In addition, the facility is subject to the applicable requirements in 25 Pa. Code Section 127.531, regarding special conditions related to acid rain.

(c) The owner(s) and operator(s) of each affected source and each affected unit at the source shall:
(1) Operate the unit(s) in compliance with a complete Acid Rain permit application or a superseding Acid Rain permit issued by the permitting authority; and,
(2) Have an Acid Rain permit.

SECTION E. Source Group Restrictions.

***** Permit Shield in Effect. *****

SECTION E. Source Group Restrictions.

Group Name: GROUP 2

Group Description: Cooling Towers

Sources included in this group

ID	Name
040	BLOCK 1 COOLING TOWER
080	BLOCK 2 COOLING TOWER

I. RESTRICTIONS.

Emission Restriction(s).

 # 001 [25 Pa. Code §127.441]

Operating permit terms and conditions.

Pursuant to the Best Available Technology (BAT) provisions of 25 Pa. Code §127.1, the Owner or Operator shall limit the particulate emissions from the cooling towers to 7.4 tons per year in a 12-month rolling period. The solids concentration in the blowdown for each cooling tower shall not exceed 1160 mg/L (averaged over 12-month rolling period). Compliance with this limit shall be demonstrated by limiting the total solids concentration in the blowdown for each cooling tower to 1160 mg/L (averaged over 12-month rolling period).

II. TESTING REQUIREMENTS.

No additional testing requirements exist except as provided in other sections of this permit including Section B (Title V General Requirements).

III. MONITORING REQUIREMENTS.

 # 002 [25 Pa. Code §127.511]

Monitoring and related recordkeeping and reporting requirements.

The permittee shall monitor the cooling tower blowdown water total solids content once per month.

IV. RECORDKEEPING REQUIREMENTS.

 # 003 [25 Pa. Code §127.511]

Monitoring and related recordkeeping and reporting requirements.

The Owner or Operator shall keep a record of the results of the testing for the cooling tower blowdown water total solids content.

V. REPORTING REQUIREMENTS.

No additional reporting requirements exist except as provided in other sections of this permit including Section B (Title V General Requirements).

VI. WORK PRACTICE REQUIREMENTS.

No additional work practice requirements exist except as provided in other sections of this permit including Section B (Title V General Requirements).

VII. ADDITIONAL REQUIREMENTS.

No additional requirements exist except as provided in other sections of this permit including Section B (Title V General Requirements).

***** Permit Shield in Effect. *****

SECTION E. Source Group Restrictions.

Group Name: GROUP 3
Group Description: RACT II

Sources included in this group

ID	Name
031	UNIT 1 COMBUSTION TURBINE
032	UNIT 2 COMBUSTION TURBINE
033	UNIT 3 COMBUSTION TURBINE
035	UNIT 5 COMBUSTION TURBINE
036	UNIT 6 COMBUSTION TURBINE
037	UNIT 7 COMBUSTION TURBINE
C01	SELECTIVE CATALYTIC REDUCTION
C02	SELECTIVE CATALYTIC REDUCTION
C03	SELECTIVE CATALYTIC REDUCTION
C05	SELECTIVE CATALYTIC REDUCTION
C06	SELECTIVE CATALYTIC REDUCTION
C07	SELECTIVE CATALYTIC REDUCTION

I. RESTRICTIONS.

Emission Restriction(s).

 # 001 [25 Pa. Code §129.97]

Presumptive RACT requirements, RACT emission limitations and petition for alternative compliance schedule.

25 Pa. Code §129.97 - Presumptive RACT requirements, RACT emission limitations and petition for alternative compliance schedule.

(a) The owner and operator of a source listed in one or more of parts (b)-(h), below, located at a major NOx-emitting facility or major VOC-emitting facility subject to 25 Pa. Code §129.96 (relating to applicability) shall comply with the applicable presumptive RACT requirement or RACT emission limitation, or both, beginning with the specified compliance date as follows, unless an alternative compliance schedule is submitted and approved under parts (k)-(m) or 25 Pa. Code §129.99 (relating to alternative RACT proposal and petition for alternative compliance schedule):
(1) January 1, 2017, for a source subject to 25 Pa. Code §129.96(a).
(2) [N/A - THE GROUP 3 TURBINES ARE NOT SUBJECT TO 25 Pa. Code §129.96(b)]

(b) The owner and operator of a source specified in this part (25 Pa. Code §129.97(b)), which is located at a major NOx-emitting facility or major VOC-emitting facility subject to 25 Pa. Code §129.96 shall comply with the following:
(1) [N/A - THE GROUP 3 TURBINES ARE NOT COMBUSTION UNITS]
(2) [N/A - THE GROUP 3 TURBINES ARE NOT COMBUSTION UNITS]
(3) The applicable recordkeeping requirements of 25 Pa. Code §129.100(d), (e) or (f) (relating to compliance demonstration and recordkeeping requirements).

(c) [N/A - THE GROUP 3 TURBINES DO NOT SATISFY ANY OF THE CATEGORIES SPECIFIED IN PARTS (1)-(8) OF THIS SUBSECTION (25 Pa. Code §129.97(c))]

(d) Except as specified under part (c), above, the owner and operator of a combustion unit or other combustion source located at a major VOC-emitting facility subject to 25 Pa. Code §129.96 shall install, maintain and operate the source in accordance with the manufacturer's specifications and with good operating practices for the control of the VOC emissions from the combustion unit or other combustion source.

(e) [N/A - THE FACILITY IS NOT A MUNICIPAL SOLID WASTE LANDFILL]

(f) [N/A - THE GROUP 3 TURBINES ARE NOT MUNICIPAL WASTE COMBUSTORS]

(g) Except as specified under part (c), above, the owner and operator of a NOx air contamination source specified in this part (25 Pa. Code §129.97(g)), which is located at a major NOx-emitting facility or a VOC air contamination source specified in

SECTION E. Source Group Restrictions.

this part (25 Pa. Code §129.97(g)), which is located at a major VOC-emitting facility subject to 25 Pa. Code §129.96 may not cause, allow or permit NOx or VOCs to be emitted from the air contamination source in excess of the applicable presumptive RACT emission limitation:
(1) [N/A - THE GROUP 3 TURBINES ARE NOT COMBUSTION UNITS OR PROCESS HEATERS]
(2) A combustion turbine:
(i) For a combined cycle or combined heat and power combustion turbine with a rated output equal to or greater than 1,000 bhp and less than 180 MW when firing:
(A) Natural gas or a noncommercial gaseous fuel, 42 ppmvd NOx @ 15% oxygen. [NOTE: THIS NOx EMISSION LIMIT IS SUPERSEDED BY THE NOx EMISSION LIMITS OF SECTION E (GROUP 1), CONDITION #009, OF THIS OPERATING PERMIT]
(B) Fuel oil, 96 ppmvd NOx @ 15% oxygen. [NOTE: THIS NOx EMISSION LIMIT IS SUPERSEDED BY THE NOx EMISSION LIMITS OF SECTION E (GROUP 1), CONDITION #009, OF THIS OPERATING PERMIT]
(C) [N/A - NOT MAJOR FOR VOC]
(D) [N/A - NOT MAJOR FOR VOC]
(ii) [N/A - THE GROUP 3 TURBINES EACH HAVE A RATED OUTPUT LESS THAN 180 MW]
(iii) [N/A - THE GROUP 3 TURBINES ARE COMBINED CYCLE COMBUSTION TURBINES]
(iv) [N/A - THE GROUP 3 TURBINES ARE COMBINED CYCLE COMBUSTION TURBINES]

(3) [N/A - THE GROUP 3 TURBINES ARE NOT STATIONARY INTERNAL COMBUSTION ENGINES]

(4) [N/A - THE GROUP 3 TURBINES DO NOT FIRE MULTIPLE FUELS]

(h) [N/A - THE GROUP 3 TURBINES ARE NOT PORTLAND CEMENT KILNS]

(i) [N/A - THE GROUP 3 TURBINES WERE NEVER THE SUBJECT OF A PREVIOUSLY ISSUED RACT OPERATING PERMIT]

(j) [N/A - THE GROUP 3 TURBINES ARE NOT SUBJECT TO THE REQUIREMENTS AND EMISSION LIMITATIONS OF 25 Pa. Code §§129.201-129.205, 145.111-145.113 and 145.141-145.146]

(k) [N/A - AN ALTERNATIVE COMPLIANCE SCHEDULE IS NOT REQUIRED]

(l) [N/A - AN ALTERNATIVE COMPLIANCE SCHEDULE IS NOT REQUIRED]

(m) [N/A - AN ALTERNATIVE COMPLIANCE SCHEDULE IS NOT REQUIRED]

Throughput Restriction(s).

 # 002 [25 Pa. Code §127.512]

Operating permit terms and conditions.

The Group 3 combustion turbines (including the proportional contribution from its associated steam turbine) shall not be modified to achieve a rated output of equal to or greater than 180 MW at ISO conditions unless prior approval from the Department has been granted, in writing. So long as the rated output of each turbine is less than 180 MW at ISO conditions, the NOx and VOC emission limits of 25 Pa. Code §129.97(g)(2)(i) are applicable.

II. TESTING REQUIREMENTS.

No additional testing requirements exist except as provided in other sections of this permit including Section B (Title V General Requirements).

III. MONITORING REQUIREMENTS.

No additional monitoring requirements exist except as provided in other sections of this permit including Section B (Title V General Requirements).

IV. RECORDKEEPING REQUIREMENTS.

 # 003 [25 Pa. Code §129.100]

Compliance demonstration and recordkeeping requirements.

SECTION E. Source Group Restrictions.

25 Pa. Code §129.100 - Compliance demonstration and recordkeeping requirements.

(a) Except as provided in part (c), below, the owner and operator of an air contamination source subject to a NOx requirement or RACT emission limitation or VOC requirement or RACT emission limitation, or both, listed in 25 Pa. Code §129.97 (relating to presumptive RACT requirements, RACT emission limitations and petition for alternative compliance schedule) shall demonstrate compliance with the applicable RACT requirement or RACT emission limitation by performing the following monitoring or testing procedures:
(1) For an air contamination source with a CEMS, monitoring and testing in accordance with the requirements of Chapter 139, Subchapter C (relating to requirements for source monitoring for stationary sources) using a 30-day rolling average, except municipal waste combustors. [NOTE: THE GROUP 3 TURBINES ARE EACH EQUIPPED WITH NOx CEMS]
(i) [N/A - THE GROUP 3 TURBINES ARE NOT COMBUSTION UNITS]
(ii) A 30-day rolling average emission rate for each applicable RACT emission limitation shall be calculated for an affected air contamination source for each consecutive operating day.
(iii) Each 30-day rolling average emission rate for an affected air contamination source must include the emissions that occur during the entire operating day, including emissions from startups, shutdowns and malfunctions.

[NOTE: VIA THE OCTOBER 2, 2016 RACT 2 PROPOSAL, THE PERMITTEE HAS SATISFACTORILY DEMONSTRATED TO THE DEPARTMENT THAT THE NOx EMISSION LIMITS FOR EACH OF THE GROUP 1 TURBINES CONTAINED AT SECTION E (GROUP 1), CONDITIONS #009 & #010, ARE MORE STRINGENT THAN THE PRESUMPTIVE NOx RACT 2 EMISSION LIMITS OF 25 Pa. Code §129.97(g)(2)(i)(A)&(B) [i.e., SECTION E (GROUP 3), CONDITION #001(g)(2)(i)(A)&(B)]; THEREFORE, THE PERMITTEE WILL USE THE NOx CEMS REQUIREMENTS OF SECTION E (GROUP 1) IN LIEU OF THE AFOREMENTIONED 30-OPERATING DAY ROLLING AVERAGE TO DEMONSTRATE COMPLIANCE WITH THE AFOREMENTIONED PRESUMPTIVE NOx RACT 2 EMISSION LIMITS FOR EACH OF THE GROUP 1 TURBINES]

(2) [N/A - THE GROUP 3 TURBINES ARE NOT PORTLAND CEMENT KILNS]

(3) [N/A - THE GROUP 3 TURBINES ARE NOT MUNICIPAL WASTE COMBUSTORS]

(4) [N/A - THE GROUP 3 TURBINES ARE EQUIPPED WITH CEMS]
[NOTE: THE GROUP 1 TURBINES ARE EACH NOT EQUIPPED WITH VOC CEMS; HOWEVER, THE GROUP 1 TURBINES ARE EACH EQUIPPED WITH NOx CEMS; THE PERMITTEE CONDUCTED THE A VOC SOURCE TESTING OF EACH OF THE GROUP 1 TURBINES BETWEEN 02/24/2020 AND 03/23/2020 AND THE SOURCE TEST REPORT RESULTS WERE IN COMPLIANCE WITH THE PERMIT LIMITS]

(b) Except as provided in 25 Pa. Code §§129.97(k) and 129.99(i) (relating to alternative RACT proposal and petition for alternative compliance schedule), the owner and operator of an air contamination source subject to part (a), above, shall demonstrate compliance with the applicable RACT requirement or RACT emission limitation in accordance with the procedures in part (a), above, not later than:
(1) January 1, 2017, for a source subject to 25 Pa. Code §129.96(a) (relating to applicability).
(2) [N/A - THE GROUP 3 TURBINES ARE NOT SUBJECT TO 25 Pa. Code §129.96(b)]

(c) [N/A - THE PERMITTEE (OWNER) HAS NOT REQUESTED A WAIVER]

(d) The owner and operator of an air contamination source subject to this section (25 Pa. Code §129.100) and 25 Pa. Code §§129.96 - 129.99 shall keep records to demonstrate compliance with 25 Pa. Code §§129.96 - 129.99 in the following manner:
(1) The records must include sufficient data and calculations to demonstrate that the requirements of 25 Pa. Code §§129.96 - 129.99 are met.
(2) Data or information required to determine compliance shall be recorded and maintained in a time-frame consistent with the averaging period of the requirement.

(e) [N/A - THE GROUP 3 TURBINES ARE NOT EXEMPT FROM THE NOx REQUIREMENTS OF 25 Pa. Code §129.97]

(f) Beginning with the compliance date specified in § 129.97(a), the owner or operator of an air contamination source claiming that the air contamination source is exempt from the applicable VOC emission rate threshold specified in § 129.99(c) and the requirements of § 129.97 based on the air contamination source's potential to emit shall maintain records that demonstrate to the Department or appropriate approved local air pollution control agency that the air

SECTION E. Source Group Restrictions.

contamination source is not subject to the specified emission rate threshold.

(g) [N/A - THE GROUP 3 TURBINES ARE NOT COMBUSTION UNITS]

(h) [N/A - THE GROUP 3 TURBINES ARE NOT PORTLAND CEMENT KILNS]

(i) The records shall be retained by the owner or operator for five (5) years and made available to the Department or appropriate approved local air pollution control agency upon receipt of a written request from the Department or appropriate approved local air pollution control agency.

V. REPORTING REQUIREMENTS.

No additional reporting requirements exist except as provided in other sections of this permit including Section B (Title V General Requirements).

VI. WORK PRACTICE REQUIREMENTS.

No additional work practice requirements exist except as provided in other sections of this permit including Section B (Title V General Requirements).

VII. ADDITIONAL REQUIREMENTS.

No additional requirements exist except as provided in other sections of this permit including Section B (Title V General Requirements).

***** Permit Shield in Effect. *****

SECTION F. Alternative Operation Requirements.

No Alternative Operations exist for this Title V facility.

SECTION G. Emission Restriction Summary.

Source Id	Source Descriptior
031	UNIT 1 COMBUSTION TURBINE

Emission Limit			Pollutant
10.000	PPMV	dry basis @15% O2 (1-hour block avg.)	Ammonia
6.000	PPMV	dry basis @15% O2 (3-hour rolling avg.)	CO
10.000	Tons/Yr	Any Single HAP (12-month rolling period)	Hazardous Air Pollutants
25.000	Tons/Yr	Combined HAPS (12-month rolling period)	Hazardous Air Pollutants
2.500	PPMV	(dry)@15% O2 CC mode premix	NOX
5.000	PPMV	(dry)@15% O2 CC mode peak	NOX
8.000	PPMV	(dry)@15% O2 CC diffusion mode	NOX
9.000	PPMV	(dry)@15% O2 SC mode premix	NOX
25.000	PPMV	(dry)@15% O2 SC premix peak mode	NOX
42.000	PPMV	(dry)@15% O2 SC diffusion mode including peak	NOX
0.003	Lbs/MMBTU	hourly basis when firing natural gas	SO2
0.051	Lbs/MMBTU	hourly basis when firing liquid fuel	SO2
0.000	Lbs/MMBTU	hourly basis in gas SC mode	Sulfuric Acid
0.001	Lbs/MMBTU	hourly basis in gas CC mode	Sulfuric Acid
0.004	Lbs/MMBTU	hourly basis in liquid fuel SC mode	Sulfuric Acid
0.008	Lbs/MMBTU	hourly basis in liquid fuel CC mode	Sulfuric Acid
0.014	Lbs/MMBTU	hourly basis in gas CC mode	TSP
0.014	Lbs/MMBTU	hourly basis in gas SC mode	TSP
0.018	Lbs/MMBTU	hourly basis in liquid fuel SC mode	TSP
0.029	Lbs/MMBTU	hourly basis in liquid fuel CC mode	TSP
1.200	PPMV	(dry)@15% O2 hourly premix	VOC
1.300	PPMV	(dry)@15% O2 hourly gas diffusion mode or liquid fuel	VOC

Source Id	Source Descriptior
032	UNIT 2 COMBUSTION TURBINE

Emission Limit			Pollutant
10.000	PPMV	dry basis @15% O2 (1-hour block avg.)	Ammonia
6.000	PPMV	dry basis @15% O2 (3-hour rolling avg.)	CO
10.000	Tons/Yr	Any Single HAP (12-month rolling period)	Hazardous Air Pollutants
25.000	Tons/Yr	Combined HAPS (12-month rolling period)	Hazardous Air Pollutants
2.500	PPMV	(dry)@15% O2 CC mode premix	NOX
5.000	PPMV	(dry)@15% O2 CC mode peak	NOX
8.000	PPMV	(dry)@15% O2 CC diffusion mode	NOX
9.000	PPMV	(dry)@15% O2 SC mode premix	NOX
25.000	PPMV	(dry)@15% O2 SC premix peak mode	NOX
42.000	PPMV	(dry)@15% O2 SC diffusion mode including peak	NOX
0.003	Lbs/MMBTU	hourly basis when firing natural gas	SO2
0.051	Lbs/MMBTU	hourly basis when firing liquid fuel	SO2
0.000	Lbs/MMBTU	hourly basis in gas SC mode	Sulfuric Acid
0.001	Lbs/MMBTU	hourly basis in gas CC mode	Sulfuric Acid
0.004	Lbs/MMBTU	hourly basis in liquid fuel SC mode	Sulfuric Acid
0.008	Lbs/MMBTU	hourly basis in liquid fuel CC mode	Sulfuric Acid
0.014	Lbs/MMBTU	hourly basis in gas CC mode	TSP

SECTION G. Emission Restriction Summary.

Source Id	Source Descriptior

0.014	Lbs/MMBTU	hourly basis in gas SC mode	TSP
0.018	Lbs/MMBTU	hourly basis in liquid fuel SC mode	TSP
0.029	Lbs/MMBTU	hourly basis in liquid fuel CC mode	TSP
1.200	PPMV	(dry)@15% O2 hourly premix	VOC
1.300	PPMV	(dry)@15% O2 hourly gas diffusion mode or liquid fuel	VOC

033 UNIT 3 COMBUSTION TURBINE

Emission Limit			Pollutant
10.000	PPMV	dry basis@15% O2 (1-hour block avg.)	Ammonia
6.000	PPMV	dry basis@15% O2 (3-hour rolling avg.)	CO
10.000	Tons/Yr	Any Single HAP (12-month rolling period)	Hazardous Air Pollutants
25.000	Tons/Yr	Combined HAPS (12-month rolling period)	Hazardous Air Pollutants
2.500	PPMV	(dry)@15% O2 CC mode premix	NOX
5.000	PPMV	(dry)@15% O2 CC mode peak	NOX
8.000	PPMV	(dry)@15% O2 CC diffusion mode	NOX
9.000	PPMV	(dry)@15% O2 SC mode premix	NOX
25.000	PPMV	(dry)@15% O2 SC premix peak mode	NOX
42.000	PPMV	(dry)@15% O2 SC diffusion mode including peak	NOX
0.003	Lbs/MMBTU	hourly basis when firing natural gas	SO2
0.051	Lbs/MMBTU	hourly basis when firing liquid fuel	SO2
0.000	Lbs/MMBTU	hourly basis in gas SC mode	Sulfuric Acid
0.001	Lbs/MMBTU	hourly basis in gas CC mode	Sulfuric Acid
0.004	Lbs/MMBTU	hourly basis in liquid fuel SC mode	Sulfuric Acid
0.008	Lbs/MMBTU	hourly basis in liquid fuel CC mode	Sulfuric Acid
0.014	Lbs/MMBTU	hourly basis in gas CC mode	TSP
0.014	Lbs/MMBTU	hourly basis in gas SC mode	TSP
0.018	Lbs/MMBTU	hourly basis in liquid fuel SC mode	TSP
0.029	Lbs/MMBTU	hourly basis in liquid fuel CC mode	TSP
1.200	PPMV	(dry)@15% O2 hourly premix	VOC
1.300	PPMV	(dry)@15% O2 hourly gas diffusion mode or liquid fuel	VOC

035 UNIT 5 COMBUSTION TURBINE

Emission Limit			Pollutant
10.000	PPMV	dry basis@15% O2 (1-hour block avg.)	Ammonia
6.000	PPMV	dry basis@15% O2 (3-hour rolling avg.)	CO
10.000	Tons/Yr	Any Single HAP (12-month rolling period)	Hazardous Air Pollutants
25.000	Tons/Yr	Combined HAPS (12-month rolling period)	Hazardous Air Pollutants
2.500	PPMV	(dry)@15% O2 CC mode premix	NOX
5.000	PPMV	(dry)@15% O2 CC mode peak	NOX
8.000	PPMV	(dry)@15% O2 CC diffusion mode	NOX
9.000	PPMV	(dry)@15% O2 SC mode premix	NOX
25.000	PPMV	(dry)@15% O2 SC premix peak mode	NOX

SECTION G. Emission Restriction Summary.

Source Id	Source Descriptior

42.000	PPMV	(dry)@15% O2 SC diffusion mode including peak	NOX
0.003	Lbs/MMBTU	hourly basis when firing natural gas	SO2
0.051	Lbs/MMBTU	hourly basis when firing liquid fuel	SO2
0.000	Lbs/MMBTU	hourly basis in gas SC mode	Sulfuric Acid
0.001	Lbs/MMBTU	hourly basis in gas CC mode	Sulfuric Acid
0.004	Lbs/MMBTU	hourly basis in liquid fuel SC mode	Sulfuric Acid
0.008	Lbs/MMBTU	hourly basis in liquid fuel CC mode	Sulfuric Acid
0.014	Lbs/MMBTU	hourly basis in gas CC mode	TSP
0.014	Lbs/MMBTU	hourly basis in gas SC mode	TSP
0.018	Lbs/MMBTU	hourly basis in liquid fuel SC mode	TSP
0.029	Lbs/MMBTU	hourly basis in liquid fuel CC mode	TSP
1.200	PPMV	(dry)@15% O2 hourly premix	VOC
1.300	PPMV	(dry)@15% O2 hourly gas diffusion mode or liquid fuel	VOC

036 UNIT 6 COMBUSTION TURBINE

Emission Limit			Pollutant
10.000	PPMV	dry basis@15% O2 (1-hour block avg.)	Ammonia
6.000	PPMV	dry basis@15% O2 (3-hour rolling avg.)	CO
10.000	Tons/Yr	Any Single HAP (12-month rolling period)	Hazardous Air Pollutants
25.000	Tons/Yr	Combined HAPS (12-month rolling period)	Hazardous Air Pollutants
2.500	PPMV	(dry)@15% O2 CC mode premix	NOX
5.000	PPMV	(dry)@15% O2 CC mode peak	NOX
8.000	PPMV	(dry)@15% O2 CC diffusion mode	NOX
9.000	PPMV	(dry)@15% O2 SC mode premix	NOX
25.000	PPMV	(dry)@15% O2 SC premix peak mode	NOX
42.000	PPMV	(dry)@15% O2 SC diffusion mode including peak	NOX
0.003	Lbs/MMBTU	hourly basis when firing natural gas	SO2
0.051	Lbs/MMBTU	hourly basis when firing liquid fuel	SO2
0.000	Lbs/MMBTU	hourly basis in gas SC mode	Sulfuric Acid
0.001	Lbs/MMBTU	hourly basis in gas CC mode	Sulfuric Acid
0.004	Lbs/MMBTU	hourly basis in liquid fuel SC mode	Sulfuric Acid
0.008	Lbs/MMBTU	hourly basis in liquid fuel CC mode	Sulfuric Acid
0.014	Lbs/MMBTU	hourly basis in gas CC mode	TSP
0.014	Lbs/MMBTU	hourly basis in gas SC mode	TSP
0.018	Lbs/MMBTU	hourly basis in liquid fuel SC mode	TSP
0.029	Lbs/MMBTU	hourly basis in liquid fuel CC mode	TSP
1.200	PPMV	(dry)@15% O2 hourly premix	VOC
1.300	PPMV	(dry)@15% O2 hourly gas diffusion mode or liquid fuel	VOC

SECTION G. Emission Restriction Summary.

Source Id	Source Description
037	UNIT 7 COMBUSTION TURBINE

Emission Limit			Pollutant
10.000	PPMV	dry basis @15% O2 (1-hour block avg.)	Ammonia
6.000	PPMV	dry basis @15% O2 (3-hour rolling avg.)	CO
10.000	Tons/Yr	Any Single HAP (12-month rolling period)	Hazardous Air Pollutants
25.000	Tons/Yr	Combined HAPS (12-month rolling period)	Hazardous Air Pollutants
2.500	PPMV	(dry)@15% O2 CC mode premix	NOX
5.000	PPMV	(dry)@15% O2 CC mode peak	NOX
8.000	PPMV	(dry)@15% O2 CC diffusion mode	NOX
9.000	PPMV	(dry)@15% O2 SC mode premix	NOX
25.000	PPMV	(dry)@15% O2 SC premix peak mode	NOX
42.000	PPMV	(dry)@15% O2 SC diffusion mode including peak	NOX
0.003	Lbs/MMBTU	hourly basis when firing natural gas	SO2
0.051	Lbs/MMBTU	hourly basis when firing liquid fuel	SO2
0.000	Lbs/MMBTU	hourly basis in gas SC mode	Sulfuric Acid
0.001	Lbs/MMBTU	hourly basis in gas CC mode	Sulfuric Acid
0.004	Lbs/MMBTU	hourly basis in liquid fuel SC mode	Sulfuric Acid
0.008	Lbs/MMBTU	hourly basis in liquid fuel CC mode	Sulfuric Acid
0.014	Lbs/MMBTU	hourly basis in gas CC mode	TSP
0.014	Lbs/MMBTU	hourly basis in gas SC mode	TSP
0.018	Lbs/MMBTU	hourly basis in liquid fuel SC mode	TSP
0.029	Lbs/MMBTU	hourly basis in liquid fuel CC mode	TSP
1.200	PPMV	(dry)@15% O2 hourly premix	VOC
1.300	PPMV	(dry)@15% O2 hourly gas diffusion mode or liquid fuel	VOC

Source Id	Source Description
040	BLOCK 1 COOLING TOWER

Emission Limit			Pollutant
7.400	Tons/Yr	Sources 040 & 080 Combined Total: 12-month rolling summation	TSP
1,160.000	mg/l	Sources 040 & 080 Combined Total: 12-month rolling average	TSP

Source Id	Source Description
080	BLOCK 2 COOLING TOWER

Emission Limit			Pollutant
7.400	Tons/Yr	Sources 040 & 080 Combined Total: 12-month rolling summation	TSP
1,160.000	mg/l	Sources 040 & 080 Combined Total: 12-month rolling average	TSP

Source Id	Source Description
101	TWO (2) DISTILLATE FUEL STORAGE TANKS

Emission Limit			Pollutant
0.600	Tons/Yr	12-month rolling summation	VOC

SECTION G. Emission Restriction Summary.

Source Id	Source Descriptior
C01	SELECTIVE CATALYTIC REDUCTION

Emission Limit			Pollutant
10.000	PPMV	dry basis @15% O2 (1-hour block avg.)	Ammonia
6.000	PPMV	dry basis @15% O2 (3-hour rolling avg.)	CO
10.000	Tons/Yr	Any Single HAP (12-month rolling period)	Hazardous Air Pollutants
25.000	Tons/Yr	Combined HAPS (12-month rolling period)	Hazardous Air Pollutants
2.500	PPMV	(dry)@15% O2 CC mode premix	NOX
5.000	PPMV	(dry)@15% O2 CC mode peak	NOX
8.000	PPMV	(dry)@15% O2 CC diffusion mode	NOX
9.000	PPMV	(dry)@15% O2 SC mode premix	NOX
25.000	PPMV	(dry)@15% O2 SC premix peak mode	NOX
42.000	PPMV	(dry)@15% O2 SC diffusion mode including peak	NOX
0.003	Lbs/MMBTU	hourly basis when firing natural gas	SO2
0.051	Lbs/MMBTU	hourly basis when firing liquid fuel	SO2
0.000	Lbs/MMBTU	hourly basis in gas SC mode	Sulfuric Acid
0.001	Lbs/MMBTU	hourly basis in gas CC mode	Sulfuric Acid
0.004	Lbs/MMBTU	hourly basis in liquid fuel SC mode	Sulfuric Acid
0.008	Lbs/MMBTU	hourly basis in liquid fuel CC mode	Sulfuric Acid
0.014	Lbs/MMBTU	hourly basis in gas CC mode	TSP
0.014	Lbs/MMBTU	hourly basis in gas SC mode	TSP
0.018	Lbs/MMBTU	hourly basis in liquid fuel SC mode	TSP
0.029	Lbs/MMBTU	hourly basis in liquid fuel CC mode	TSP
1.200	PPMV	(dry)@15% O2 hourly premix	VOC
1.300	PPMV	(dry)@15% O2 hourly gas diffusion mode or liquid fuel	VOC

Source Id	Source Descriptior
C02	SELECTIVE CATALYTIC REDUCTION

Emission Limit			Pollutant
10.000	PPMV	dry basis @15% O2 (1-hour block avg.)	Ammonia
6.000	PPMV	dry basis @15% O2 (3-hour rolling avg.)	CO
10.000	Tons/Yr	Any Single HAP (12-month rolling period)	Hazardous Air Pollutants
25.000	Tons/Yr	Combined HAPS (12-month rolling period)	Hazardous Air Pollutants
2.500	PPMV	(dry)@15% O2 CC mode premix	NOX
5.000	PPMV	(dry)@15% O2 CC mode peak	NOX
8.000	PPMV	(dry)@15% O2 CC diffusion mode	NOX
9.000	PPMV	(dry)@15% O2 SC mode premix	NOX
25.000	PPMV	(dry)@15% O2 SC premix peak mode	NOX
42.000	PPMV	(dry)@15% O2 SC diffusion mode including peak	NOX
0.003	Lbs/MMBTU	hourly basis when firing natural gas	SO2
0.051	Lbs/MMBTU	hourly basis when firing liquid fuel	SO2
0.000	Lbs/MMBTU	hourly basis in gas SC mode	Sulfuric Acid
0.001	Lbs/MMBTU	hourly basis in gas CC mode	Sulfuric Acid
0.004	Lbs/MMBTU	hourly basis in liquid fuel SC mode	Sulfuric Acid
0.008	Lbs/MMBTU	hourly basis in liquid fuel CC mode	Sulfuric Acid
0.014	Lbs/MMBTU	hourly basis in gas CC mode	TSP

SECTION G. Emission Restriction Summary.

Source Id	Source Descriptior

0.014	Lbs/MMBTU	hourly basis in gas SC mode	TSP
0.018	Lbs/MMBTU	hourly basis in liquid fuel SC mode	TSP
0.029	Lbs/MMBTU	hourly basis in liquid fuel CC mode	TSP
1.200	PPMV	(dry)@15% O2 hourly premix	VOC
1.300	PPMV	(dry)@15% O2 hourly gas diffusion mode or liquid fuel	VOC

C03 SELECTIVE CATALYTIC REDUCTION

Emission Limit			Pollutant
10.000	PPMV	dry basis@15% O2 (1-hour block avg.)	Ammonia
6.000	PPMV	dry basis@15% O2 (3-hour rolling avg.)	CO
10.000	Tons/Yr	Any Single HAP (12-month rolling period)	Hazardous Air Pollutants
25.000	Tons/Yr	Combined HAPS (12-month rolling period)	Hazardous Air Pollutants
2.500	PPMV	(dry)@15% O2 CC mode premix	NOX
5.000	PPMV	(dry)@15% O2 CC mode peak	NOX
8.000	PPMV	(dry)@15% O2 CC diffusion mode	NOX
9.000	PPMV	(dry)@15% O2 SC mode premix	NOX
25.000	PPMV	(dry)@15% O2 SC premix peak mode	NOX
42.000	PPMV	(dry)@15% O2 SC diffusion mode including peak	NOX
0.003	Lbs/MMBTU	hourly basis when firing natural gas	SO2
0.051	Lbs/MMBTU	hourly basis when firing liquid fuel	SO2
0.000	Lbs/MMBTU	hourly basis in gas SC mode	Sulfuric Acid
0.001	Lbs/MMBTU	hourly basis in gas CC mode	Sulfuric Acid
0.004	Lbs/MMBTU	hourly basis in liquid fuel SC mode	Sulfuric Acid
0.008	Lbs/MMBTU	hourly basis in liquid fuel CC mode	Sulfuric Acid
0.014	Lbs/MMBTU	hourly basis in gas CC mode	TSP
0.014	Lbs/MMBTU	hourly basis in gas SC mode	TSP
0.018	Lbs/MMBTU	hourly basis in liquid fuel SC mode	TSP
0.029	Lbs/MMBTU	hourly basis in liquid fuel CC mode	TSP
1.200	PPMV	(dry)@15% O2 hourly premix	VOC
1.300	PPMV	(dry)@15% O2 hourly gas diffusion mode or liquid fuel	VOC

C05 SELECTIVE CATALYTIC REDUCTION

Emission Limit			Pollutant
10.000	PPMV	dry basis@15% O2 (1-hour block avg.)	Ammonia
6.000	PPMV	dry basis@15% O2 (3-hour rolling avg.)	CO
10.000	Tons/Yr	Any Single HAP (12-month rolling period)	Hazardous Air Pollutants
25.000	Tons/Yr	Combined HAPS (12-month rolling period)	Hazardous Air Pollutants
2.500	PPMV	(dry)@15% O2 CC mode premix	NOX
5.000	PPMV	(dry)@15% O2 CC mode peak	NOX
8.000	PPMV	(dry)@15% O2 CC diffusion mode	NOX
9.000	PPMV	(dry)@15% O2 SC mode premix	NOX
25.000	PPMV	(dry)@15% O2 SC premix peak mode	NOX

SECTION G. Emission Restriction Summary.

Source Id	Source Descriptior

42.000	PPMV	(dry)@15% O2 SC diffusion mode including peak	NOX
0.003	Lbs/MMBTU	hourly basis when firing natural gas	SO2
0.051	Lbs/MMBTU	hourly basis when firing liquid fuel	SO2
0.000	Lbs/MMBTU	hourly basis in gas SC mode	Sulfuric Acid
0.001	Lbs/MMBTU	hourly basis in gas CC mode	Sulfuric Acid
0.004	Lbs/MMBTU	hourly basis in liquid fuel SC mode	Sulfuric Acid
0.008	Lbs/MMBTU	hourly basis in liquid fuel CC mode	Sulfuric Acid
0.014	Lbs/MMBTU	hourly basis in gas CC mode	TSP
0.014	Lbs/MMBTU	hourly basis in gas SC mode	TSP
0.018	Lbs/MMBTU	hourly basis in liquid fuel SC mode	TSP
0.029	Lbs/MMBTU	hourly basis in liquid fuel CC mode	TSP
1.200	PPMV	(dry)@15% O2 hourly premix	VOC
1.300	PPMV	(dry)@15% O2 hourly gas diffusion mode or liquid fuel	VOC

C06 SELECTIVE CATALYTIC REDUCTION

Emission Limit			Pollutant
10.000	PPMV	dry basis@15% O2 (1-hour block avg.)	Ammonia
6.000	PPMV	dry basis@15% O2 (3-hour rolling avg.)	CO
10.000	Tons/Yr	Any Single HAP (12-month rolling period)	Hazardous Air Pollutants
25.000	Tons/Yr	Combined HAPS (12-month rolling period)	Hazardous Air Pollutants
2.500	PPMV	(dry)@15% O2 CC mode premix	NOX
5.000	PPMV	(dry)@15% O2 CC mode peak	NOX
8.000	PPMV	(dry)@15% O2 CC diffusion mode	NOX
9.000	PPMV	(dry)@15% O2 SC mode premix	NOX
25.000	PPMV	(dry)@15% O2 SC premix peak mode	NOX
42.000	PPMV	(dry)@15% O2 SC diffusion mode including peak	NOX
0.003	Lbs/MMBTU	hourly basis when firing natural gas	SO2
0.051	Lbs/MMBTU	hourly basis when firing liquid fuel	SO2
0.000	Lbs/MMBTU	hourly basis in gas SC mode	Sulfuric Acid
0.001	Lbs/MMBTU	hourly basis in gas CC mode	Sulfuric Acid
0.004	Lbs/MMBTU	hourly basis in liquid fuel SC mode	Sulfuric Acid
0.008	Lbs/MMBTU	hourly basis in liquid fuel CC mode	Sulfuric Acid
0.014	Lbs/MMBTU	hourly basis in gas CC mode	TSP
0.014	Lbs/MMBTU	hourly basis in gas SC mode	TSP
0.018	Lbs/MMBTU	hourly basis in liquid fuel SC mode	TSP
0.029	Lbs/MMBTU	hourly basis in liquid fuel CC mode	TSP
1.200	PPMV	(dry)@15% O2 hourly premix	VOC
1.300	PPMV	(dry)@15% O2 hourly gas diffusion mode or liquid fuel	VOC

SECTION G. Emission Restriction Summary.

Source Id	Source Descriptior
C07	SELECTIVE CATALYTIC REDUCTION

Emission Limit			Pollutant
10.000	PPMV	dry basis @15% O2 (1-hour block avg.)	Ammonia
6.000	PPMV	dry basis @15% O2 (3-hour rolling avg.)	CO
10.000	Tons/Yr	Any Single HAP (12-month rolling period)	Hazardous Air Pollutants
25.000	Tons/Yr	Combined HAPS (12-month rolling period)	Hazardous Air Pollutants
2.500	PPMV	(dry)@15% O2 CC mode premix	NOX
5.000	PPMV	(dry)@15% O2 CC mode peak	NOX
8.000	PPMV	(dry)@15% O2 CC diffusion mode	NOX
9.000	PPMV	(dry)@15% O2 SC mode premix	NOX
25.000	PPMV	(dry)@15% O2 SC premix peak mode	NOX
42.000	PPMV	(dry)@15% O2 SC diffusion mode including peak	NOX
0.003	Lbs/MMBTU	hourly basis when firing natural gas	SO2
0.051	Lbs/MMBTU	hourly basis when firing liquid fuel	SO2
0.000	Lbs/MMBTU	hourly basis in gas SC mode	Sulfuric Acid
0.001	Lbs/MMBTU	hourly basis in gas CC mode	Sulfuric Acid
0.004	Lbs/MMBTU	hourly basis in liquid fuel SC mode	Sulfuric Acid
0.008	Lbs/MMBTU	hourly basis in liquid fuel CC mode	Sulfuric Acid
0.014	Lbs/MMBTU	hourly basis in gas CC mode	TSP
0.014	Lbs/MMBTU	hourly basis in gas SC mode	TSP
0.018	Lbs/MMBTU	hourly basis in liquid fuel SC mode	TSP
0.029	Lbs/MMBTU	hourly basis in liquid fuel CC mode	TSP
1.200	PPMV	(dry)@15% O2 hourly premix	VOC
1.300	PPMV	(dry)@15% O2 hourly gas diffusion mode or liquid fuel	VOC

Site Emission Restriction Summary

Emission Limit		Pollutant
92.410	Tons/Yr	TSP
49.130	Tons/Yr	SO2
100.540	Tons/Yr	CO
444.500	Tons/Yr	Ammonia
171.460	Tons/Yr	NOX
43.690	Tons/Yr	VOC
46.100	Tons/Yr	Sulfuric Acid

SECTION H. Miscellaneous.

(a) The Department received the operating permit application for this facility on 02/09/2026. The facility is required to pay an Annual Operating Permit Maintenance Fee in accordance with Pennsylvania Code, Title 25, Chapter 127, Section 127.704(d). The Annual Maintenance Fee is due on or before December 31 of each year for the next calendar year.

(b) This permit is a renewal of Operating Permit No. 48-00076.

(c) This is a Title V Operating Permit facility.

(d) Plan Approvals include:
48-328-006A issued 6/20/2006
48-00076A - withdrawn
48-00076B issued 4/16/2015
48-00076C - withdrawn
48-00076D - withdrawn
48-00076E issued 2/3/2020

(e) General Permits include:
48-312-022GP issued 7/21/2003
GP9-48-005 issued 5/23/2019

(e) Requests for Determination (RFDs) include:
RFD approved 10/21/2004
RFD #39-0782 approved 10/9/2013
RFD #39-0783 approved 10/18/2013

(f) The following is a list of sources that have been determined by the Department to be of minor significance under 25 Pa. Code, Chapter 127, Section 127.14(a)(8) and are not regulated in this State-Only Operating Permit. However, this determination does not exempt the sources from compliance with all applicable air quality regulations specified in 25 Pa. Code Chapters 121-143:

- Two (2) 200 MW Steam Turbine Generators (Unit 4 & Unit 8)
- Six (6) Heat Recovery Steam Generators (HRSG 1-3 & HRSG 5-7)
- Parts Washer (RFD submitted 10/21/2004)

****** End of Report ******